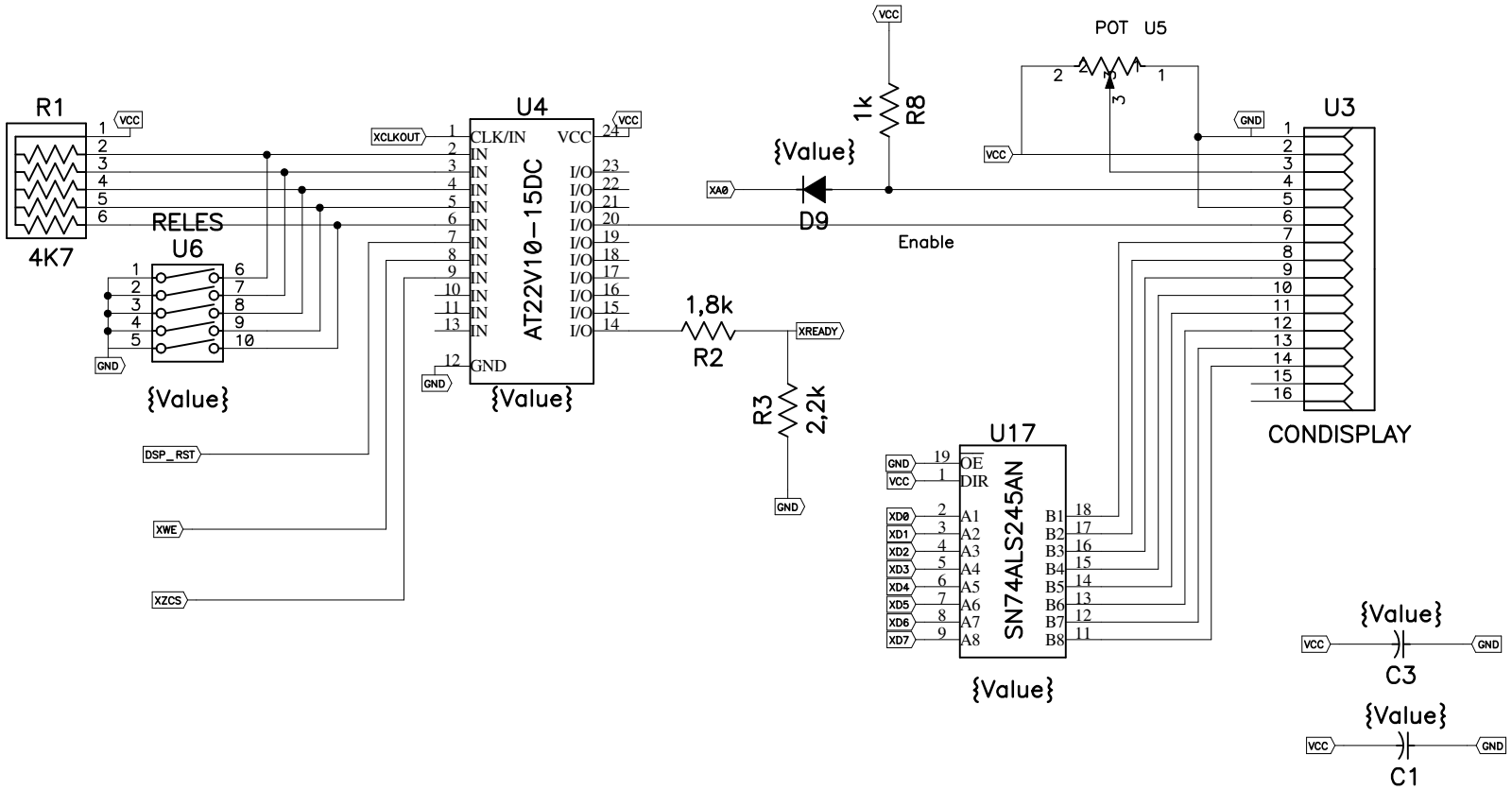

Title	Placa final	
Size	Number —	Rev —
Date Wed Sep 21, 2005	Drawn by MDR	
Filename varhojas4.SCH	Sheet 2 of 5	