ANEXO I. PLANOS

1. PLANOS ELABORADOS POR ELIMCO

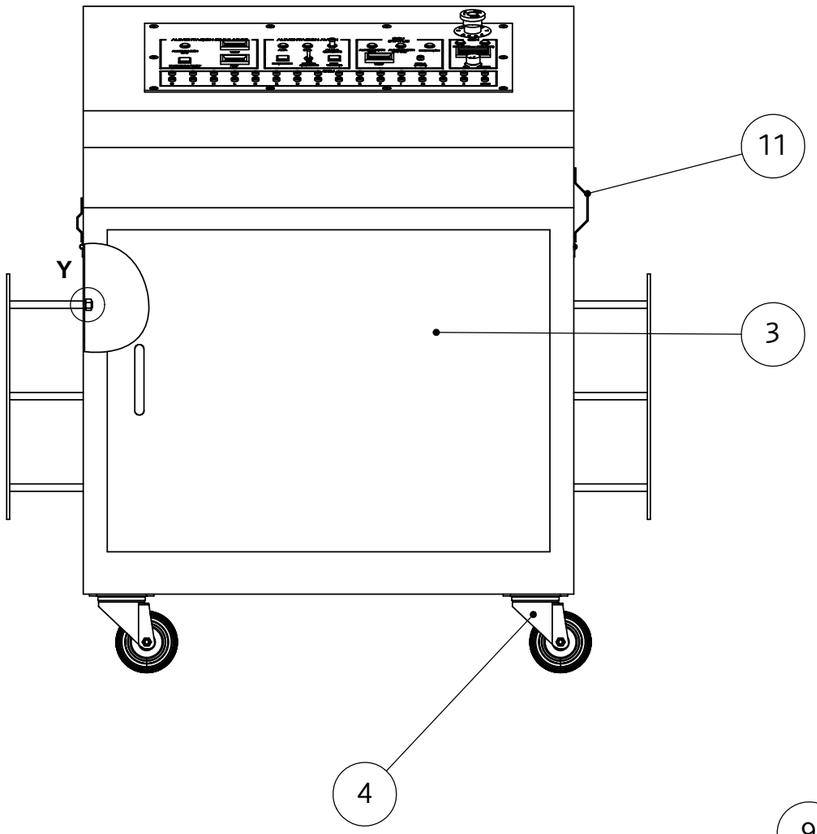

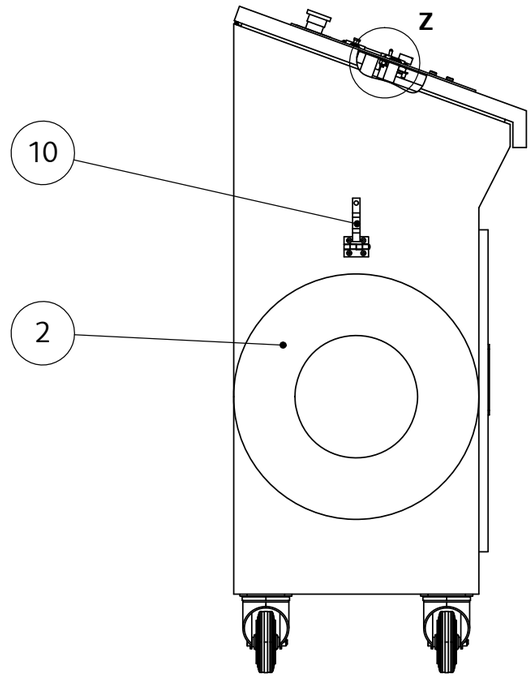

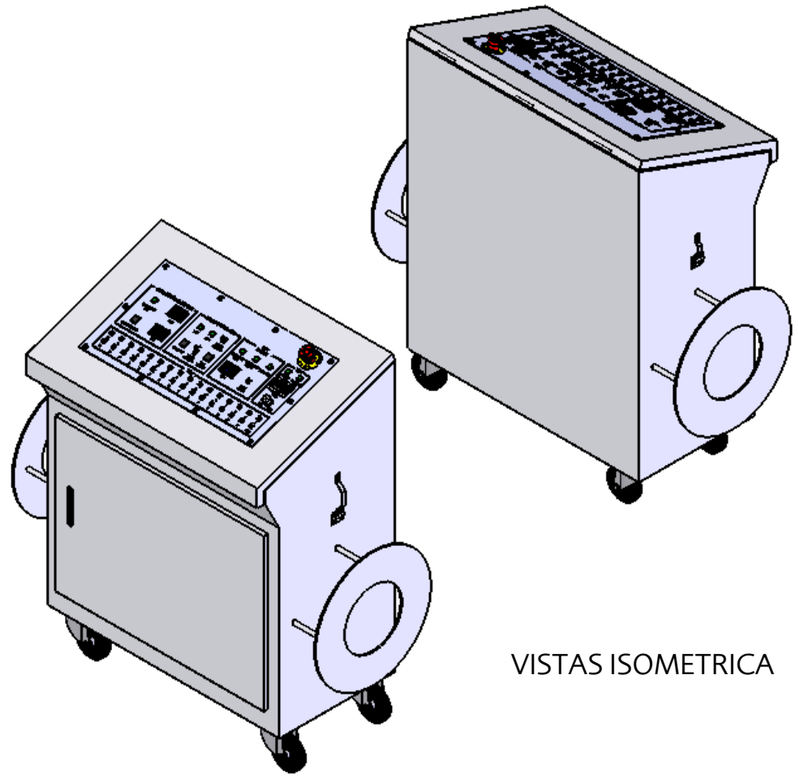

VISTAS ISOMETRICA

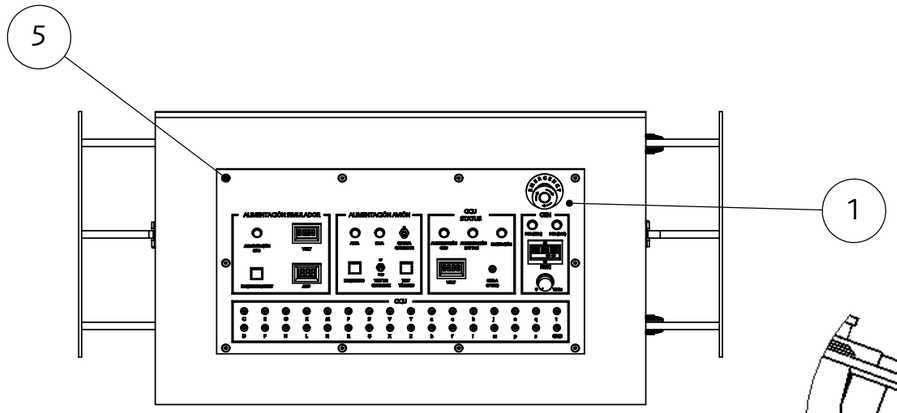

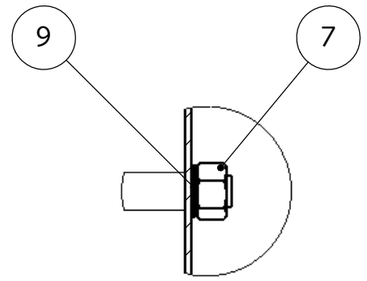

DETALLE Y
ESCALA 1 : 2

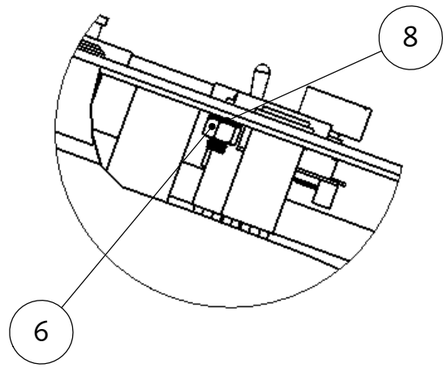

DETALLE Z
ESCALA 1 : 2

ITEM	P/N	DESCRIPCIÓN	CANTIDAD
11	ELAD0822041600	CONJUNTO PORTA CONECTORES_2	1
10	ELAD0822041500	CONJUNTO PORTA CONECTORES_1	1
9	DIN 6905-9.3-FSt	ARANDELA GROWER	8
8	DIN 6905-5.5-FSt	ARANDELA GROWER	10
7	ISO 4034 - M10 - C	TUERCA HEXAGONAL	8
6	ISO 4034 - M6 - S	TUERCA HEXOGONAL	10
5	DIN 7991 - M6 x 16 ---9.7C	TORNILLO	10
4	TENTE 4031582010244	RUEDA	4
3	RITTAL 2668.500	PUPITRE	1
2	ELAD0822041300	CONJUNTO SOPORTE CABLES	2
1	ELAD0822041100	CONJUNTO PLACA	1

Revisión/Revision	Edición/Edition	Descripción/Description	Verifcado/Verified	Aprobado/Approved	Fecha/Date
00	A	EDICION INICIAL	J. J. FLORES	R. DOMINGUEZ	15/01/2009

ELIMCO AERONAUTICS

Parque Tecnológico Aerópolis
C/ Hispano Aviación, parcela 36
Carretera Nacional IV, Km 529
41300 - La Rinconada - Sevilla
Tlf: 954 36 78 70
Fax: 954 35 22 54

Tolerancia de cotas generales segun DIN 7168 (grado de precisión mediano)
General tolerances according to DIN 7168 (medium tolerance class)

hasta 3 up to 3	de 3 a 6 from 3 to 6	de 6 a 30 from 6 to 30	de 30 a 120 from 30 to 120	de 120 a 400 from 120 to 400	de 400 a 1000 from 400 to 1000	desde 1000 from 1000
±0.1	±0.1	±0.2	±0.3	±0.5	±0.8	±1.2

La tolerancia angular ±1º Angular tolerance ±1º | **Dimensiones en milimetros** All dimensions in milimeters | **Redondear todas las aristas vivas** Round all sharp cant

	Revisión/Revision	Fecha/Date
Dibujado Drawn	M. A. González	15/01/2009
Verificado Verified	J. J. Flores	15/01/2009
Aprobado Approved	R. Dominguez	15/01/2009

TITULO / TITLE:

CONJUNTO

Nº DE PLANO / DWG. Nº.: **ELAD0822041000**

ESCALA/SCALE: 1 : 10 | **MATERIAL:** - | **PESO**/WEIGHT: - | **TRAT.**/TREATMENT: -

REVISIÓN / REVISION : 00 | **EDICIÓN** / EDITION: A | A3 | **HOJA** / SHEET: 1/1

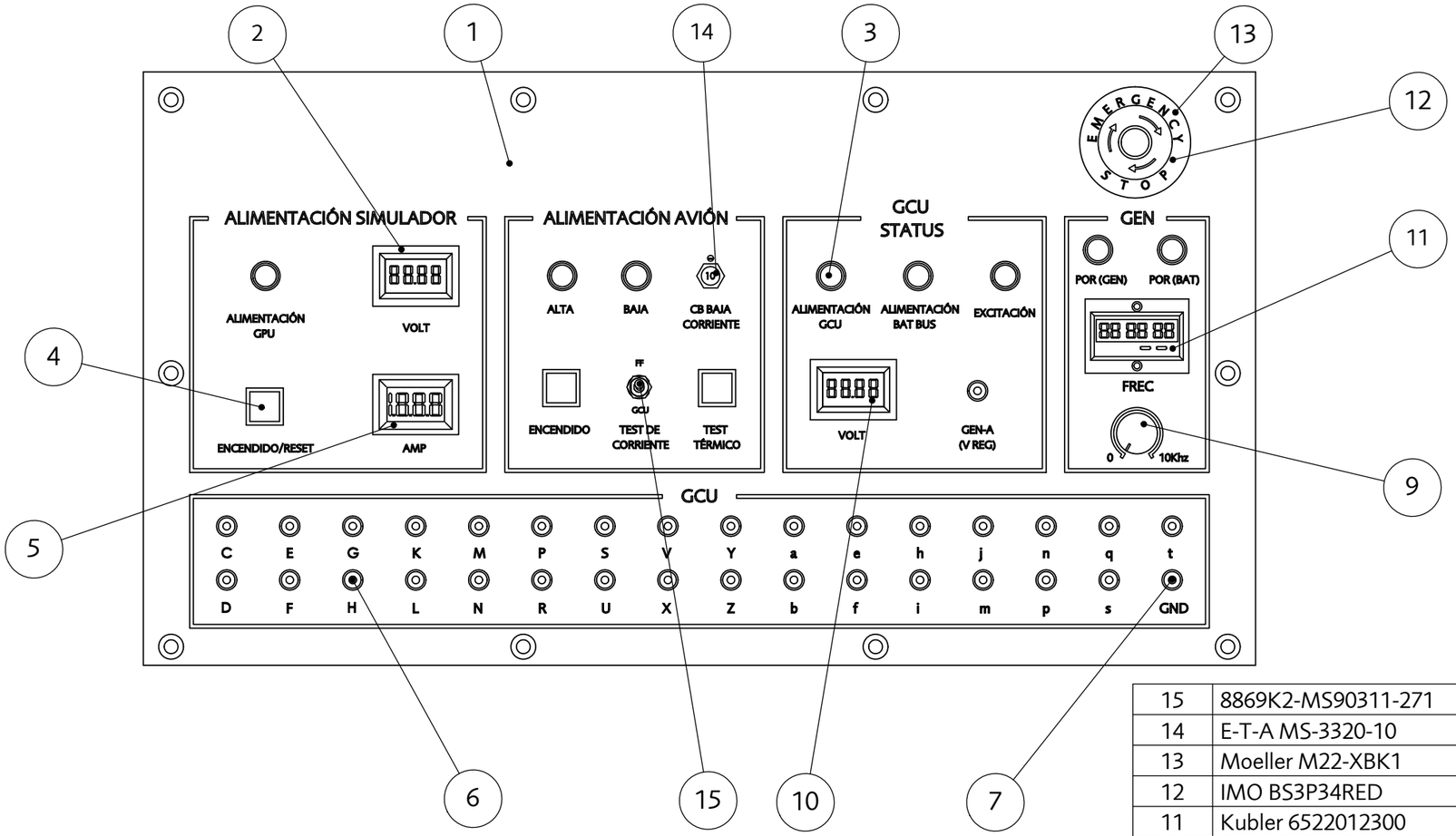

ITEM	P/N	DESCRIPCIÓN	CANTIDAD
15	8869K2-MS90311-271	INTERRUPTOR DE PALANCA	1
14	E-T-A MS-3320-10	BREAKER 10A	1
13	Moeller M22-XBK1	PEGATINA SETA DE EMERGENCIA	1
12	IMO BS3P34RED	SETA DE EMERGENCIA	1
11	Kubler 6522012300	FRECUENCIMETRO	1
10	Datel DMS-20PC-0-RS-C	VOLTIMETRO	1
9	Multicom MC21018	EMBELLECEDOR POTENCIOMETRO	1
8	VISHAY P11VYN	POTENCIOMETRO 10K	1
7	SPC TECHNOLOGY - 861-N	BANANA NEGRA	1
6	SPC TECHNOLOGY - 861-R	BANANA ROJA	32
5	muRata DCA-20PC-4-DC4-RL-C	AMPERIMETRO	1
4	Honeywell AML21BBA2AC	PULSADOR	3
3	CML 6346-005-505G	DIODO LED VERDE	8
2	MuRata DMS-20PC-1-DCM-C	VOLTIMETRO	1
1	ELAD0822041101	PLACA	1

Revisión/Revision	Edición/Edition	Descripción/Description	Verifcado/Verified	Aprobado/Approved	Fecha/Date
00	A	EDICION INICIAL	J. J. FLORES	R. DOMINGUEZ	15/01/2009

ELIMCO AERONAUTICS
Parque Tecnológico Aerópolis
C/ Hispano Aviación, parcela 36
Carretera Nacional IV, Km 529
41300 - La Rinconada - Sevilla
Tlf: 954 36 78 70
Fax: 954 35 22 54

Tolerancia de cotas generales segun DIN 7168 (grado de precisión mediano)
General tolerances according to DIN 7168 (medium tolerance class)

hasta 3 up to 3	de 3 a 6 from 3 to 6	de 6 a 30 from 6 to 30	de 30 a 120 from 30 to 120	de 120 a 400 from 120 to 400	de 400 a 1000 from 400 to 1000	desde 1000 from 1000
±0.1	±0.1	±0.2	±0.3	±0.5	±0.8	±1.2

La tolerancia angular ±1º Angular tolerance ±1º
Dimensiones en milimetros All dimensions in milimeters
Redondear todas las aristas vivas Round all sharp cant

	Revisión/Revision	Fecha/Date
Dibujado Drawn	M. A. González	15/01/2009
Verificado Verified	J. J.Flores	15/01/2009
Aprobado Approved	R. Dominguez	15/01/2009

ESCALA/SCALE: -
MATERIAL: -
PESO/WEIGHT: -
TRAT./TREATMENT: -

TITULO / TITLE:

CONJUNTO DESPIECE

Nº DE PLANO / DWG. Nº.: ELAD0822041100

REVISIÓN / REVISION : 00 | EDICIÓN / EDITION: A | A3 | HOJA / SHEET: 1/1

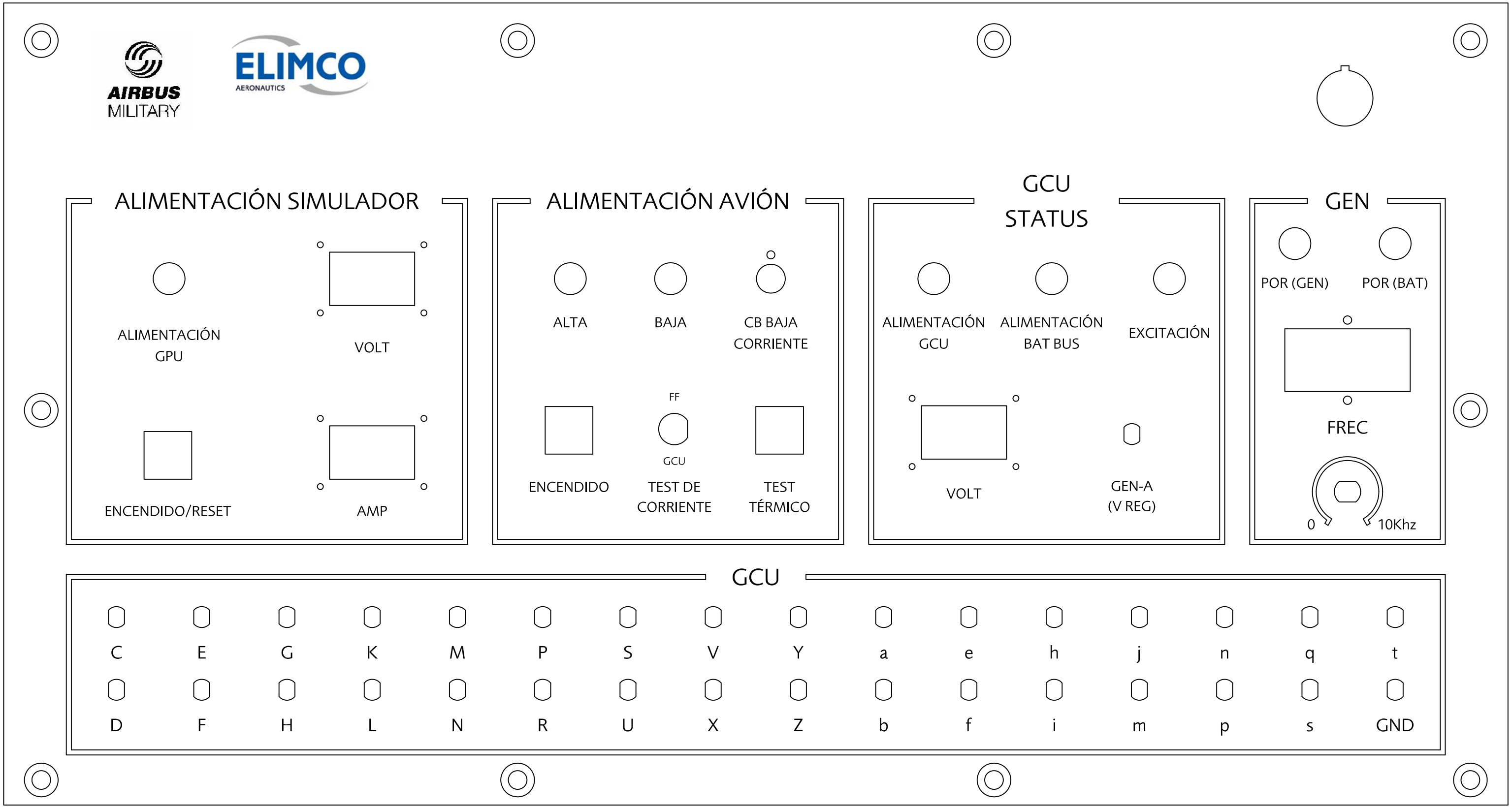
AIRBUS MILITARY
ELIMCO AERONAUTICS
ALIMENTACIÓN SIMULADOR
ALIMENTACIÓN GPU
VOLT
ENCENDIDO/RESET
AMP
ALIMENTACIÓN AVIÓN
ALTA
BAJA
CB BAJA CORRIENTE
FF
GCU
ENCENDIDO
TEST DE CORRIENTE
TEST TÉRMICO
GCU STATUS
ALIMENTACIÓN GCU
ALIMENTACIÓN BAT BUS
EXCITACIÓN
VOLT
GEN-A (V REG)
GEN
POR (GEN)
POR (BAT)
FREC
0
10Khz
GCU
C E G K M P S V Y a e h j n q t
D F H L N R U X Z b f i m p s GND

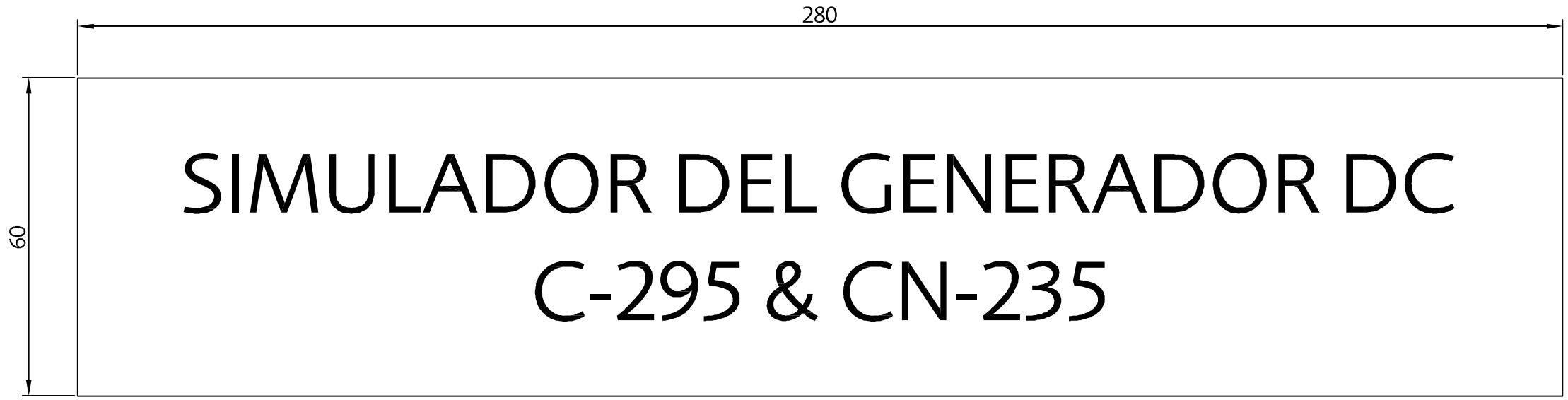

00	A	EDICION INICIAL	J. A. SANTOS	J. A. SANTOS	19-05-2009
Revisión / Revision:	Edición / Edition:	Descripción /Description	Verificado /Verified	Aprobado /Approved	Fecha /Date

ELIMCO
Parque Tecnológico Aerópolis
C/ Hispano Aviación, parcela 36
Carretera Nacional IV, Km 529
41300 - La Rinconada - Sevilla
Tlf: 954 36 78 70
Fax: 954 35 22 54

Tolerancias de cotas generales segun DIN 7168 (grado de precisión mediano)
General tolerances according to DIN 7168 (medium tolerance class)

hasta3 up to 3	de 3 a 6 from 3 to 6	de 6 a 30 from 6 to 30	de 30 a 120 from 30 to 120	de 120 a 400 from 120 to 400	de 400 a 1000 from 400 to 1000	desde 1000 from 1000
±0.1	±0.1	±0.2	±0.3	±0.5	±0.8	±1.2

La tolerancia angular ±1°
Angular tolerance ±1°

Dimensiones en milimetros
All dimensions in milimeters

Redondear todas las aristas vivas
Round all sharp edges

	Nombre /Name	Fecha /Date
Dibujado Drawn	M. A. González	19-05-2009
Verificado Verified	J. A. SANTOS	19-05-2009
Aprobado Approved	J. A. SANTOS	19-05-2009

ESCALA / SCALE : 1 : 1

MATERIAL: -

PESO / WEIGHT: -

TRAT. /TREATMENT: -

TÍTULO / TITLE:

ETIQUETA TITULO

N° DE PLANO / DWG. NO.:

ELAD0822041102

Revisión / Revision : 00 | Edición / Edition : A | A3 | HOJA /SHEET: 1/1

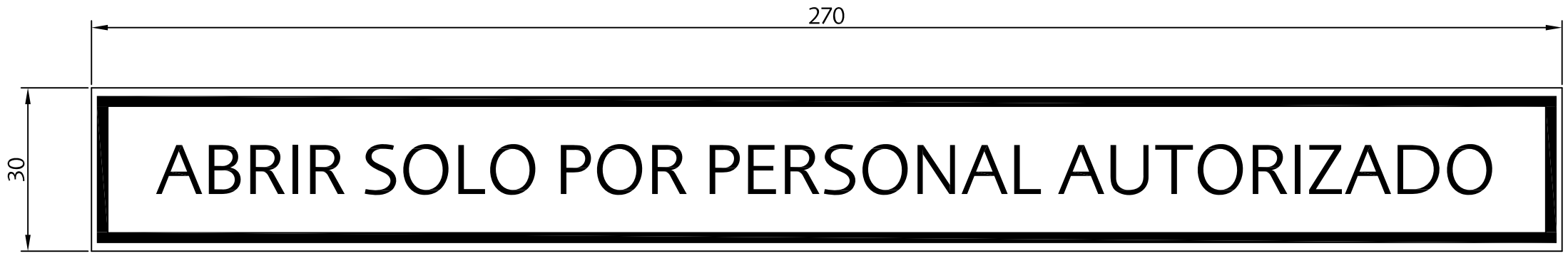

Revisión / Revision:	Edición / Edition:	Descripción /Description	Verificado /Verified	Aprobado /Approved	Fecha /Date
00	A	EDICION INICIAL	J. A. SANTOS	J. A. SANTOS	19-05-2009

ELIMCO AERONAUTICS
Parque Tecnológico Aerópolis
C/ Hispano Aviación, parcela 36
Carretera Nacional IV, Km 529
41300 - La Rinconada - Sevilla
Tlf: 954 36 78 70
Fax: 954 35 22 54

Tolerancias de cotas generales segun DIN 7168 (grado de precisión mediano)
General tolerances according to DIN 7168 (medium tolerance class)

hasta3 up to 3	**de 3 a 6** from 3 to 6	**de 6 a 30** from 6 to 30	**de 30 a 120** from 30 to 120	**de 120 a 400** from 120 to 400	**de 400 a 1000** from 400 to 1000	**desde 1000** from 1000
±0.1	±0.1	±0.2	±0.3	±0.5	±0.8	±1.2

La tolerancia angular ±1°
Angular tolerance ±1°

Dimensiones en milimetros
All dimensions in milimeters

Redondear todas las aristas vivas
Round all sharp edges

	Nombre /Name	Fecha /Date
Dibujado Drawn	M. A. González	19-05-2009
Verificado Verified	J. A. SANTOS	19-05-2009
Aprobado Approved	J. A. SANTOS	19-05-2009

TÍTULO / TITLE:

ETIQUETA CONSOLA

N° DE PLANO / DWG. NO.:

ELAD0822041103

ESCALA / SCALE : 1 : 1

MATERIAL: -

PESO / WEIGHT: -

TRAT. /TREATMENT: -

Revisión / Revision : 00 | Edición / Edition : A | A3 | HOJA /SHEET: 1/1

Revisión / Revision:	Edición / Edition:	Descripción /Description	Verificado /Verified	Aprobado /Approved	Fecha /Date
00	A	EDICION INICIAL	J. A. SANTOS	J. A. SANTOS	19-05-2009

ELIMCO AERONAUTICS
Parque Tecnológico Aerópolis
C/ Hispano Aviación, parcela 36
Carretera Nacional IV, Km 529
41300 - La Rinconada - Sevilla
Tlf: 954 36 78 70
Fax: 954 35 22 54

Tolerancias de cotas generales segun DIN 7168 (grado de precisión mediano)
General tolerances according to DIN 7168 (medium tolerance class)

hasta3 up to 3	de 3 a 6 from 3 to 6	de 6 a 30 from 6 to 30	de 30 a 120 from 30 to 120	de 120 a 400 from 120 to 400	de 400 a 1000 from 400 to 1000	desde 1000 from 1000
±0.1	±0.1	±0.2	±0.3	±0.5	±0.8	±1.2

La tolerancia angular ±1° Angular tolerance ±1° | **Dimensiones en milimetros** All dimensions in milimeters | **Redondear todas las aristas vivas** Round all sharp edges

	Nombre /Name	Fecha /Date
Dibujado Drawn	M. A. González	19-05-2009
Verificado Verified	J. A. SANTOS	19-05-2009
Aprobado Approved	J. A. SANTOS	19-05-2009

ESCALA / SCALE : 1 : 1

MATERIAL: -

PESO / WEIGHT: -

TRAT. /TREATMENT: -

TÍTULO / TITLE:

ETIQUETA PUERTA

N° DE PLANO / DWG. NO.:

ELAD0822041104

Revisión / Revision : 00 | Edición / Edition : A | A3 | HOJA /SHEET: 1/1

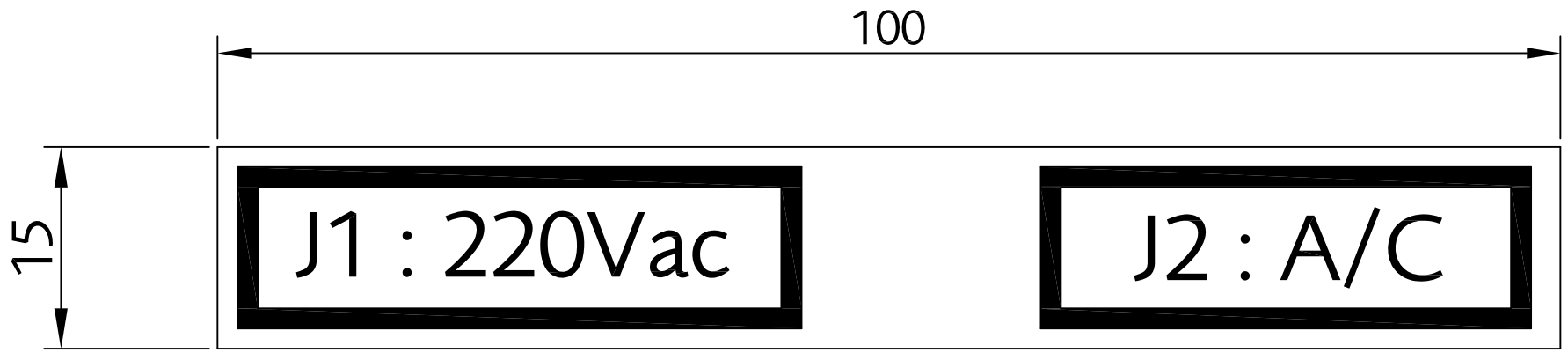

00	A	EDICION INICIAL	J. A. SANTOS	J. A. SANTOS	19-05-2009
Revisión / Revision:	Edición / Edition:	Descripción /Description	Verificado /Verified	Aprobado /Approved	Fecha /Date

ELIMCO AERONAUTICS
Parque Tecnológico Aerópolis
C/ Hispano Aviación, parcela 36
Carretera Nacional IV, Km 529
41300 - La Rinconada - Sevilla
Tlf: 954 36 78 70
Fax: 954 35 22 54

Tolerancias de cotas generales segun DIN 7168 (grado de precisión mediano)
General tolerances according to DIN 7168 (medium tolerance class)

hasta3 up to 3	**de 3 a 6** from 3 to 6	**de 6 a 30** from 6 to 30	**de 30 a 120** from 30 to 120	**de 120 a 400** from 120 to 400	**de 400 a 1000** from 400 to 1000	**desde 1000** from 1000
±0.1	±0.1	±0.2	±0.3	±0.5	±0.8	±1.2

La tolerancia angular ±1° Angular tolerance ±1° | **Dimensiones en milimetros** All dimensions in milimeters | **Redondear todas las aristas vivas** Round all sharp edges

	Nombre /Name	Fecha /Date
Dibujado Drawn	M. A. González	19-05-2009
Verificado Verified	J. A. SANTOS	19-05-2009
Aprobado Approved	J. A. SANTOS	19-05-2009

ESCALA / SCALE : 2 : 1
MATERIAL: -
PESO / WEIGHT: -
TRAT. /TREATMENT: -

TÍTULO / TITLE:
ETIQUETA CONSOLA

N° DE PLANO / DWG. NO.:
ELAD0822041105

Revisión / Revision : 00 | Edición / Edition : A | A3 | HOJA /SHEET: 1/1

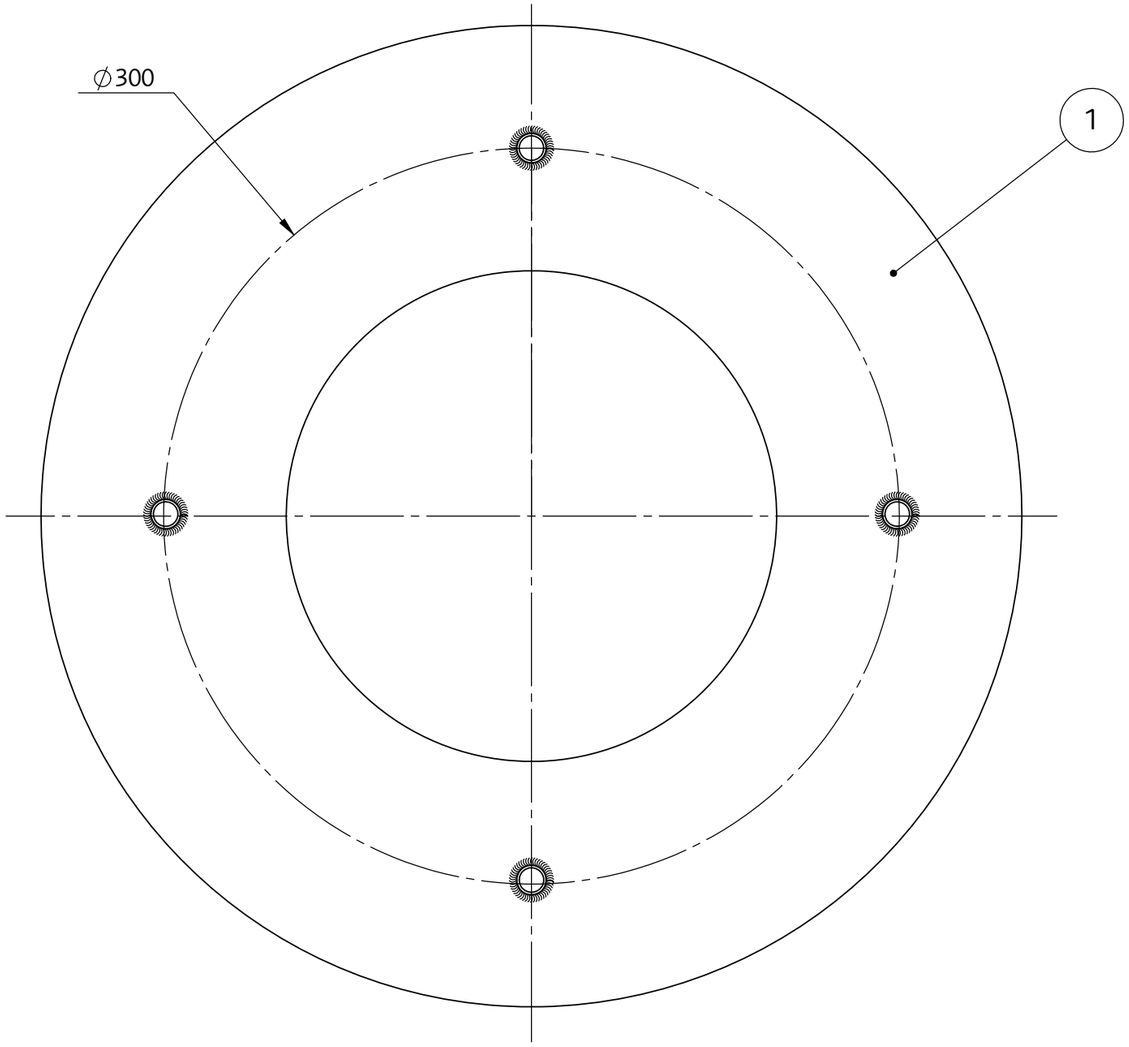

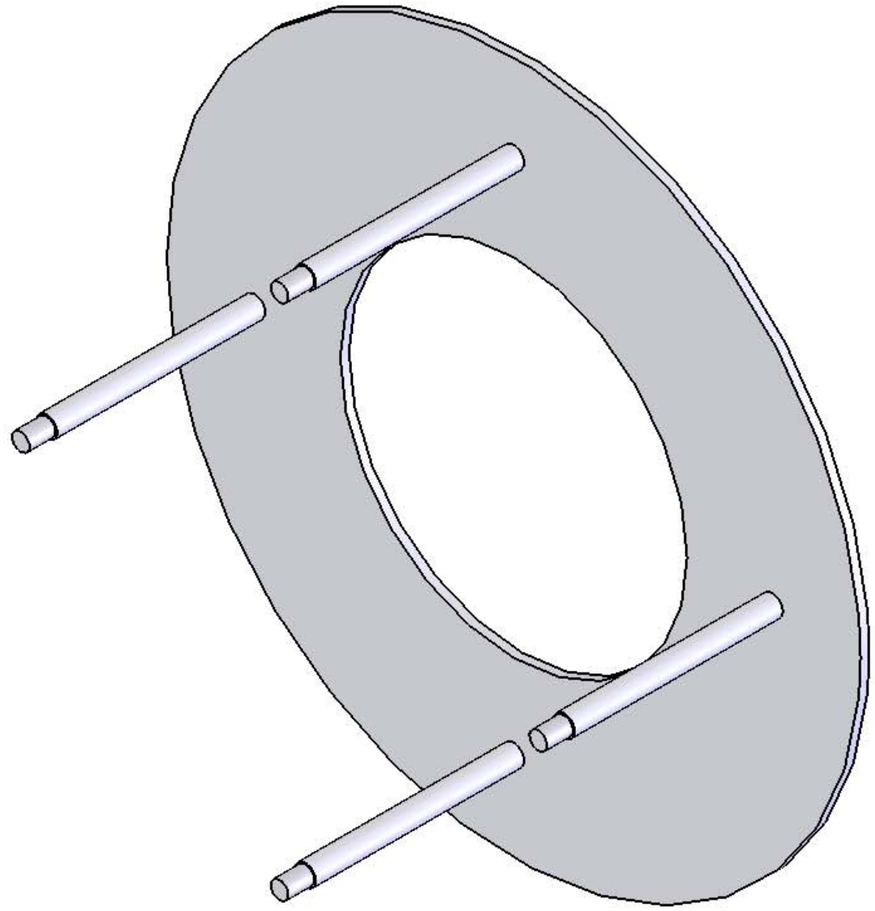

VISTA ISOMETRICA

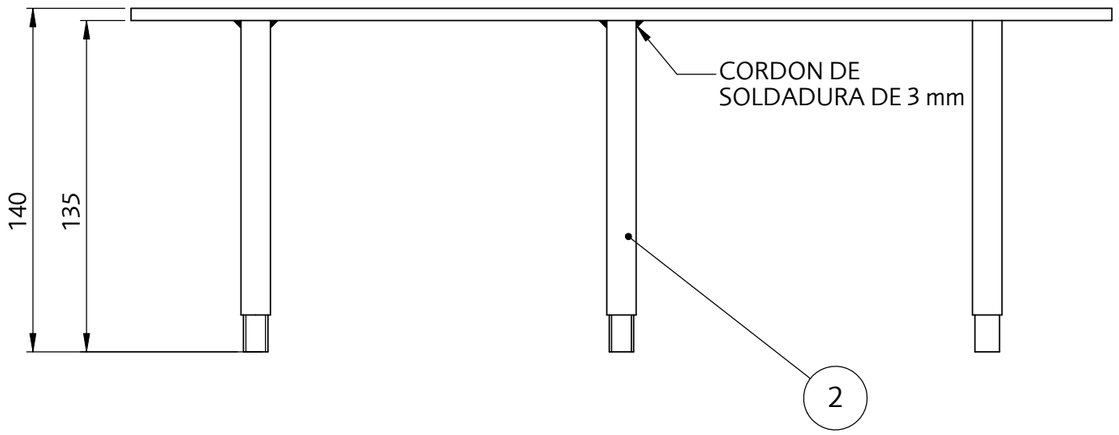

ITEM	P/N	DESCRIPCIÓN	CANTIDAD
2	ELAD0822041302	EJE PORTACABLES	4
1	ELAD0822041301	SOPORTE	1

Revisión/Revision	Edición/Edition	Descripción/Description	Verifcado/Verified	Aprobado/Approved	Fecha/Date
00	A	EDICION INICIAL	J. J. FLORES	R. DOMINGUEZ	15/01/2009

ELIMCO AERONAUTICS
Parque Tecnológico Aerópolis
C/ Hispano Aviación, parcela 36
Carretera Nacional IV, Km 529
41300 - La Rinconada - Sevilla
Tlf: 954 36 78 70
Fax: 954 35 22 54

Tolerancia de cotas generales segun DIN 7168 (grado de precisión mediano)
General tolerances according to DIN 7168 (medium tolerance class)

hasta 3 up to 3	de 3 a 6 from 3 to 6	de 6 a 30 from 6 to 30	de 30 a 120 from 30 to 120	de 120 a 400 from 120 to 400	de 400 a 1000 from 400 to 1000	desde 1000 from 1000
±0.1	±0.1	±0.2	±0.3	±0.5	±0.8	±1.2

La tolerancia angular ±1º Angular tolerance ±1º | **Dimensiones en milimetros** All dimensions in milimeters | **Redondear todas las aristas vivas** Round all sharp cant

	Revisión/Revision	Fecha/Date
Dibujado Drawn	M. A. González	15/01/2009
Verificado Verified	J. J. Flores	15/01/2009
Aprobado Approved	R. Dominguez	15/01/2009

ESCALA/SCALE: 1 : 2.5 | **MATERIAL:** -

PESO/WEIGHT: - | **TRAT.**/TREATMENT: -

TITULO / TITLE:

CONJUNTO SOPORTE PARA CABLE

Nº DE PLANO / DWG. Nº.:

ELAD0822041300

REVISIÓN / REVISION : **00** | **EDICIÓN** / EDITION: **A** | **A3** | **HOJA** / SHEET: **1/1**

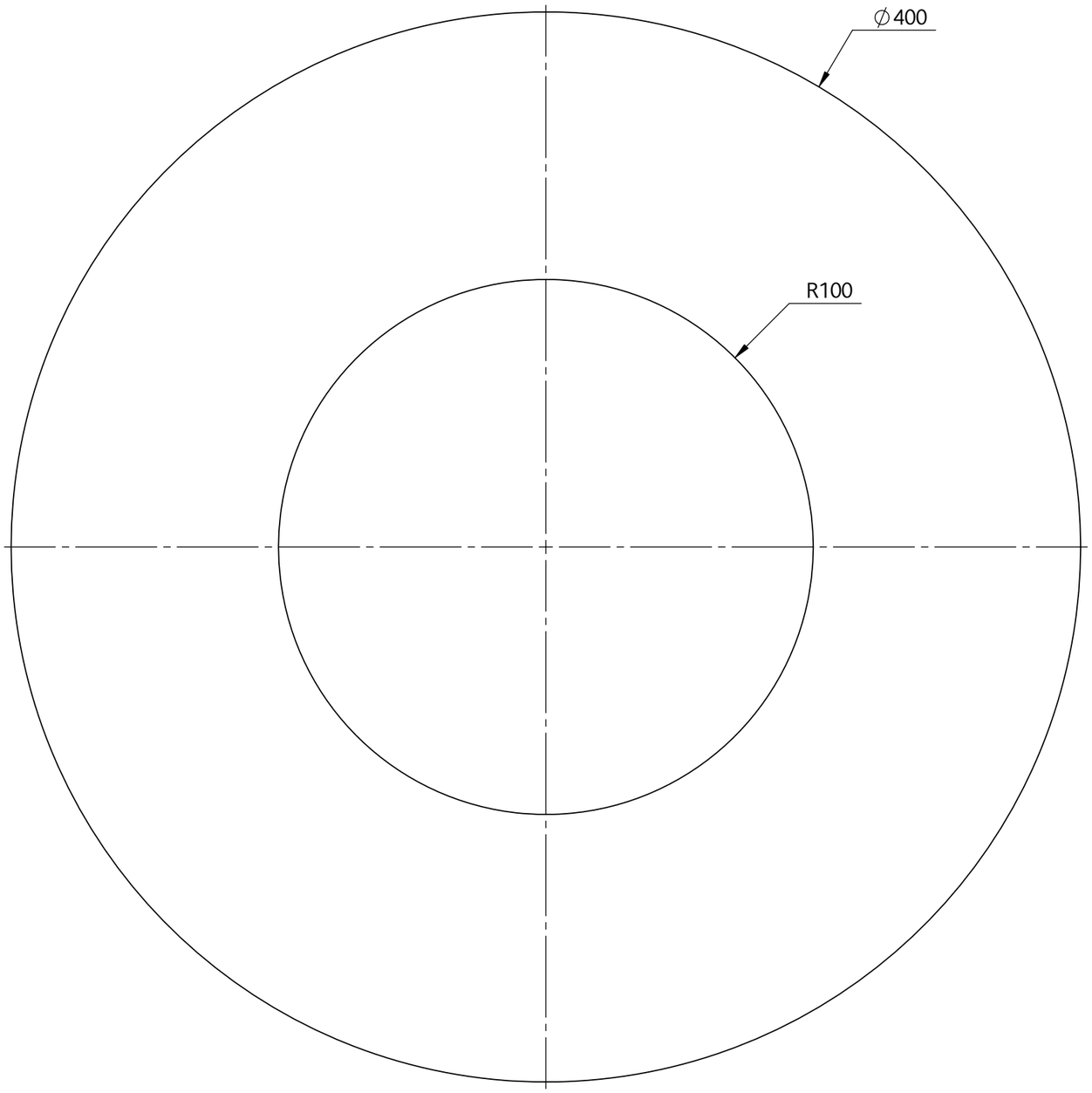

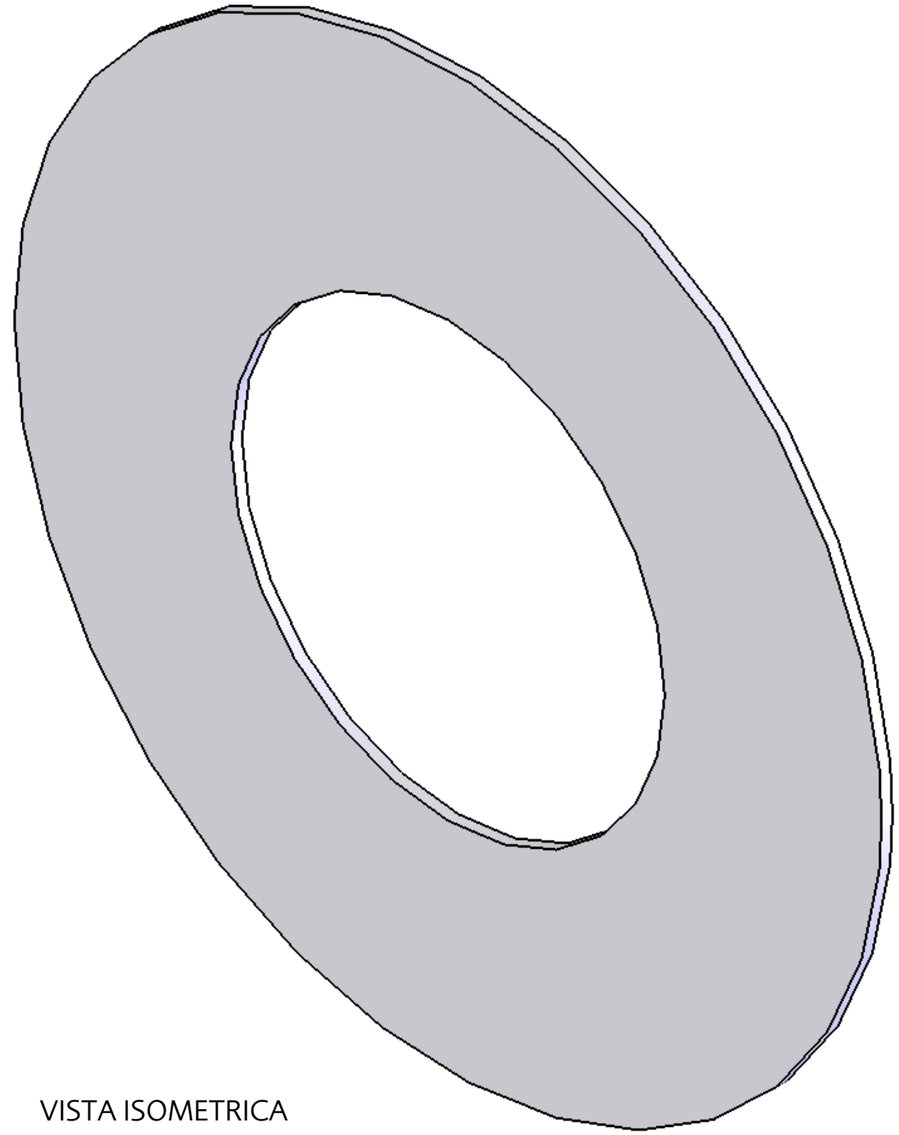

VISTA ISOMETRICA

00	A	EDICION INICIAL	J. J. FLORES	J. A. SANTOS	15/01/2009
Revisión/Revision	**Edición**/Edition	**Descripción**/Description	**Verifcado**/Verified	**Aprobado**/Approved	**Fecha**/Date

ELIMCO AERONAUTICS
Parque Tecnológico Aerópolis
C/ Hispano Aviación, parcela 36
Carretera Nacional IV, Km 529
41300 - La Rinconada - Sevilla
Tlf: 954 36 78 70
Fax: 954 35 22 54

Tolerancia de cotas generales segun DIN 7168 (grado de precisión mediano)
General tolerances according to DIN 7168 (medium tolerance class)

hasta 3 up to 3	**de 3 a 6** from 3 to 6	**de 6 a 30** from 6 to 30	**de 30 a 120** from 30 to 120	**de 120 a 400** from 120 to 400	**de 400 a 1000** from 400 to 1000	**desde 1000** from 1000
±0.1	±0.1	±0.2	±0.3	±0.5	±0.8	±1.2

La tolerancia angular ±1º Angular tolerance ±1º | **Dimensiones en milimetros** All dimensions in milimeters | **Redondear todas las aristas vivas** Round all sharp cant

	Revisión/Revision	**Fecha**/Date
Dibujado Drawn	**M. A. González**	**15/01/2009**
Verificado Verified	**J. J. Flores**	**15/01/2009**
Aprobado Approved	**J. A. Santos**	**15/01/2009**

ESCALA/SCALE: **1 : 2**
MATERIAL: **ACERO F-111 (ESPESOR 5 mm)**
PESO/WEIGHT: -
TRAT./TREATMENT: **PINTURA RAL 7035**

TITULO / TITLE:

PIEZA PORTACABLES

Nº DE PLANO / DWG. Nº.:
ELAD0822041301

REVISIÓN / REVISION : **00** | **EDICIÓN** / EDITION: **A** | **A3** | **HOJA** / SHEET: **1/1**

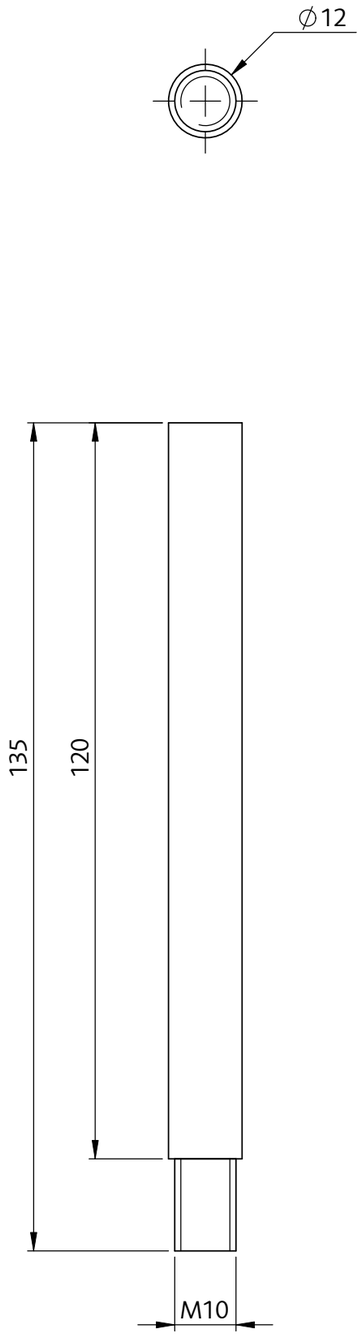

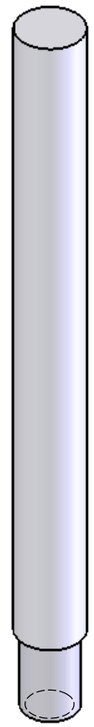

VISTA ISOMETRICA

00	A	EDICION INICIAL	J. J. FLORES	J. A. SANTOS	15/01/2009
Revisión/Revision	**Edición**/Edition	**Descripción**/Description	**Verifcado**/Verified	**Aprobado**/Approved	**Fecha**/Date

ELIMCO AERONAUTICS

Parque Tecnológico Aerópolis
C/ Hispano Aviación, parcela 36
Carretera Nacional IV, Km 529
41300 - La Rinconada - Sevilla
Tlf: 954 36 78 70
Fax: 954 35 22 54

Tolerancia de cotas generales segun DIN 7168 (grado de precisión mediano)
General tolerances according to DIN 7168 (medium tolerance class)

hasta 3 up to 3	**de 3 a 6** from 3 to 6	**de 6 a 30** from 6 to 30	**de 30 a 120** from 30 to 120	**de 120 a 400** from 120 to 400	**de 400 a 1000** from 400 to 1000	**desde 1000** from 1000
±0.1	±0.1	±0.2	±0.3	±0.5	±0.8	±1.2

La tolerancia angular ±1º Angular tolerance ±1º | **Dimensiones en milimetros** All dimensions in milimeters | **Redondear todas las aristas vivas** Round all sharp cant

	Revisión/Revision	**Fecha**/Date
Dibujado Drawn	**M. A. González**	**15/01/2009**
Verificado Verified	**J. J. Flores**	**15/01/2009**
Aprobado Approved	**J. A. Santos**	**15/01/2009**

ESCALA/SCALE: **1:1** | **MATERIAL:** **ACERO F-111**

PESO/WEIGHT: - | **TRAT.**/TREATMENT: **PINTURA RAL 7035**

TITULO / TITLE:

EJE PORTACABLES

Nº DE PLANO / DWG. Nº.: **ELAD0822041302**

REVISIÓN / REVISION : **00** | **EDICIÓN** / EDITION: **A** | **A3** | **HOJA** / SHEET: **1/1**

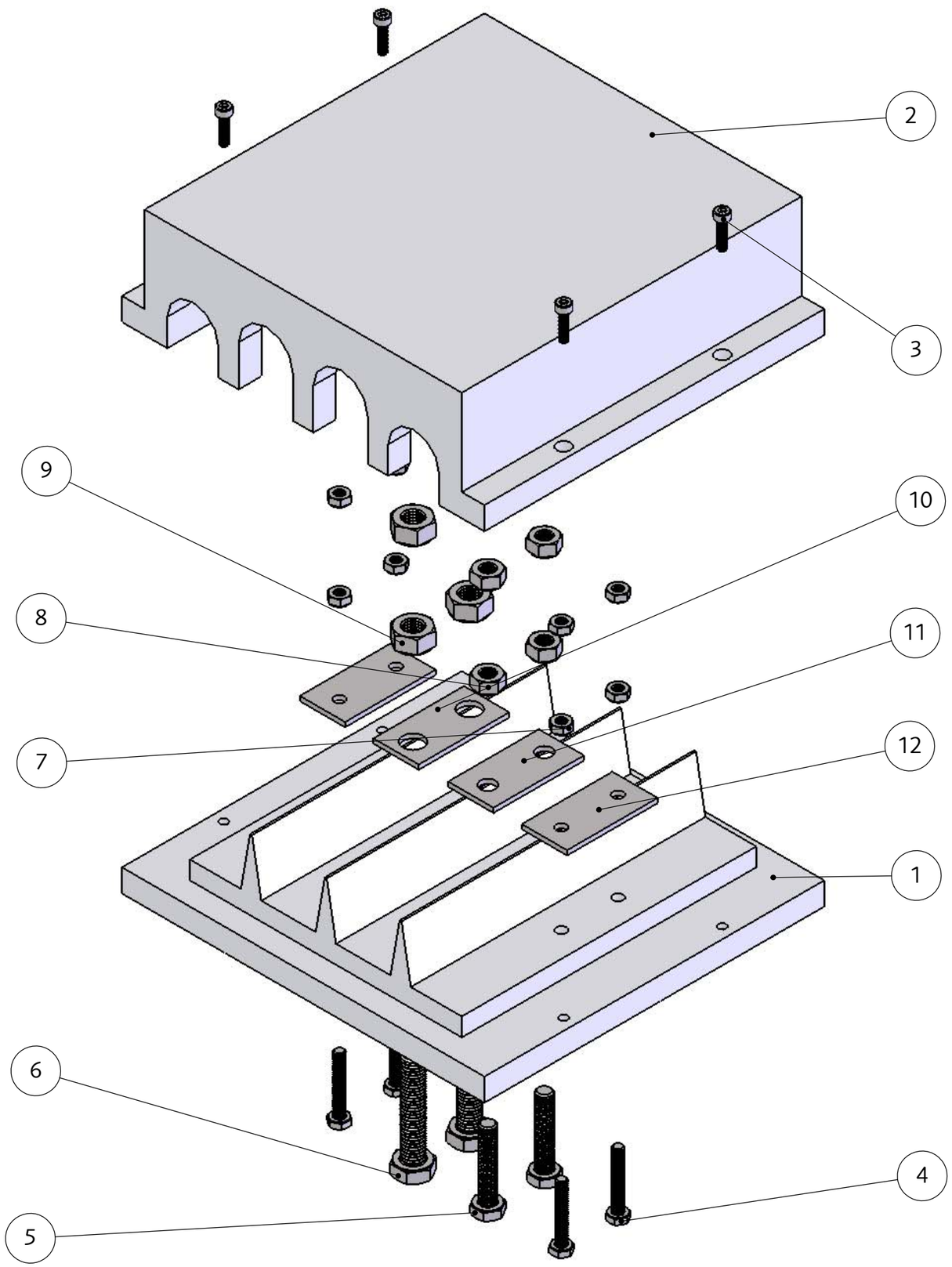

ITEM	N.º DE PIEZA	DESCRIPCIÓN	CANT.
12	-	PLACA DE CONEXION PARA M4	2
11	-	PLACA DE CONEXION PARA M6	1
10	-	PLACA DE CONEXION PARA M8	1
9	ISO 4032 - M8 - W - S	TUERCA HEXAGONAL	4
8	ISO 4032 - M6 - W - S	TUERCA HEXAGONAL	4
7	ISO 4032 - M4 - W - S	TUERCA HEXAGONAL	8
6	ISO 4014 - M8 x 40 x 40-S	TORNILLO CABEZA HEXAGONAL	2
5	ISO 4014 - M6 x 30 x 30-S	TORNILLO CABEZA HEXAGONAL	2
4	ISO 4014 - M4 x 25 x 25-S	TORNILLO CABEZA HEXAGONAL	4
3	DIN 912 M3 x 12 --- 12S	TORNILLO CABEZA REDONDA	4
2	ELAD0822041402	TAPA PORTATERMINALES	1
1	ELAD0822041401	BASE PORTATERMINALES	1

Revisión/Revision	**Edición**/Edition	**Descripción**/Description	**Verifcado**/Verified	**Aprobado**/Approved	**Fecha**/Date
00	A	EDICION INICIAL	J. JOSE FLORES	JOSE A. SANTOS	18/03/2009

ELIMCO AERONAUTICS

Parque Tecnológico Aerópolis
C/ Hispano Aviación, parcela 36
Carretera Nacional IV, Km 529
41300 - La Rinconada - Sevilla
Tlf: 954 36 78 70
Fax: 954 35 22 54

Tolerancia de cotas generales segun DIN 7168 (grado de precisión mediano)
General tolerances according to DIN 7168 (medium tolerance class)

hasta 3 up to 3	**de 3 a 6** from 3 to 6	**de 6 a 30** from 6 to 30	**de 30 a 120** from 30 to 120	**de 120 a 400** from 120 to 400	**de 400 a 1000** from 400 to 1000	**desde 1000** from 1000
±0.1	±0.1	±0.2	±0.3	±0.5	±0.8	±1.2

La tolerancia angular ±1º Angular tolerance ±1º | **Dimensiones en milimetros** All dimensions in milimeters | **Redondear todas las aristas vivas** Round all sharp cant

	Revisión/Revision	**Fecha**/Date
Dibujado Drawn	**M. A. González**	**18/03/2009**
Verificado Verified	**J. Jose Flores**	**18/03/2009**
Aprobado Approved	**J. A. Santos**	**18/03/2009**

ESCALA/SCALE: -
MATERIAL: -
PESO/WEIGHT: -
TRAT./TREATMENT: -

TITULO / TITLE:

CONJUNTO PIEZA POTATERMINALES

Nº DE PLANO / DWG. Nº.: **ELAD0822041400**

REVISIÓN / REVISION : **00** | **EDICIÓN** / EDITION: **A** | **A3** | **HOJA** / SHEET: **1/1**

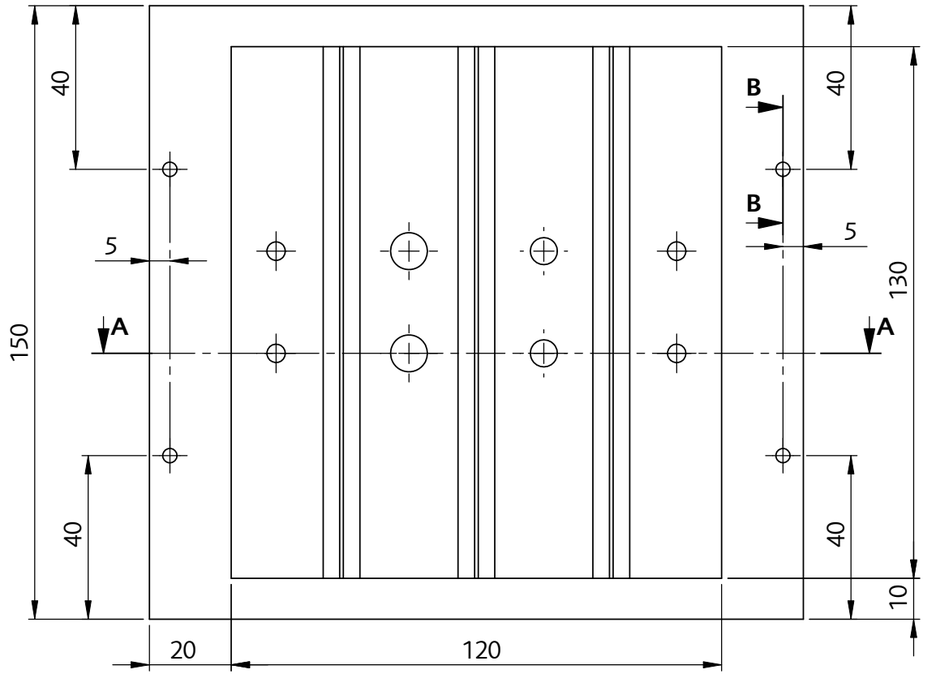

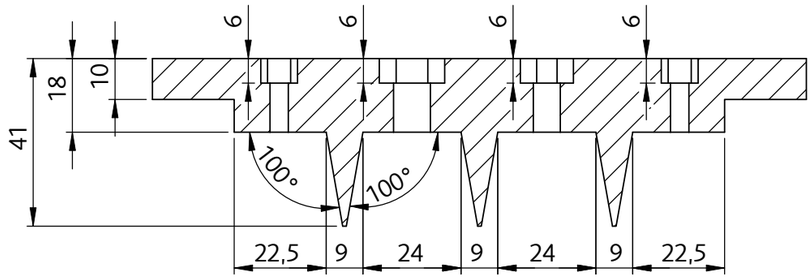

SECCIÓN A-A
ESCALA 1 : 1.5

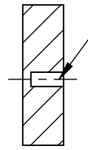

ZONA PARA LA COLOCACION DE UN HELICOIL PARA M3
INCRUSTADO EN LA PIEZA

SECCIÓN B-B
ESCALA 1 : 1.5

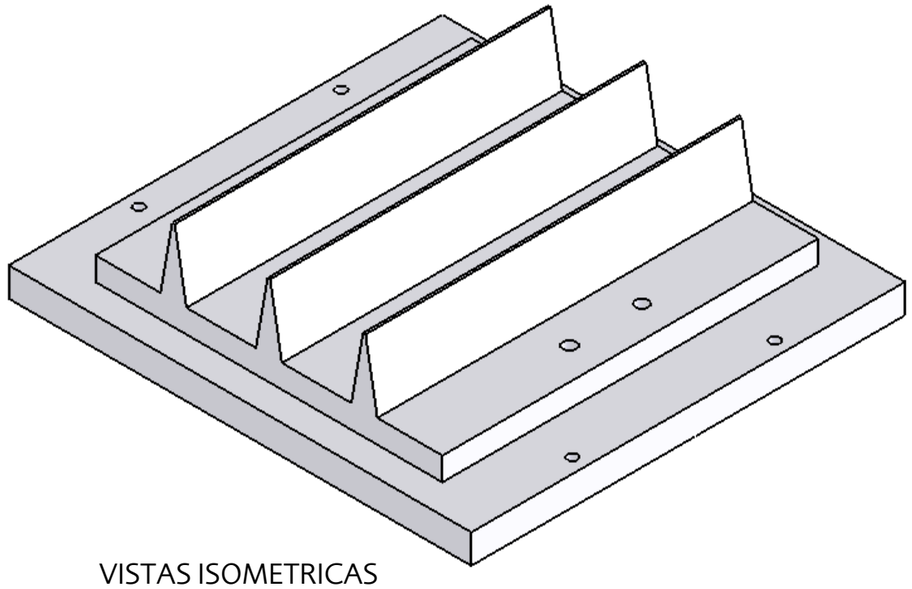

VISTAS ISOMETRICAS

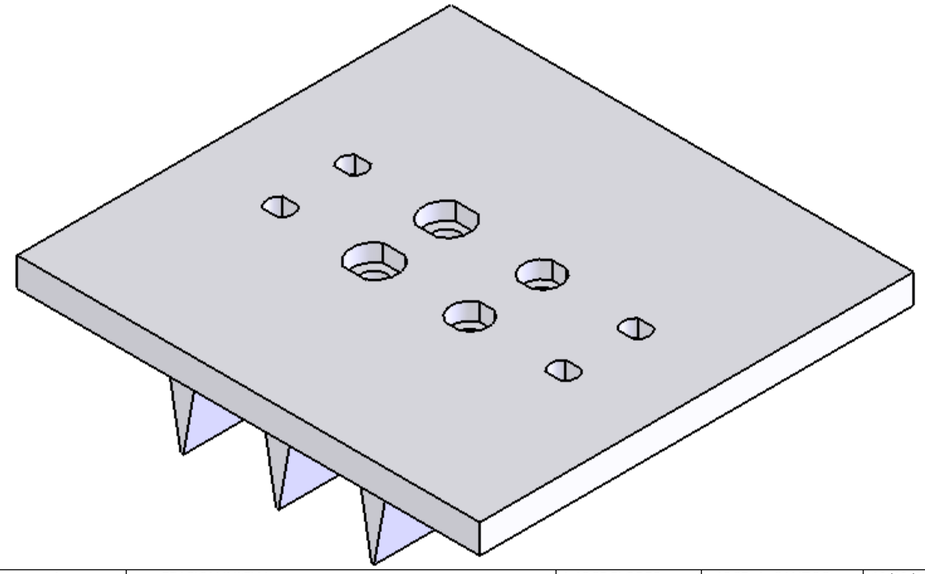

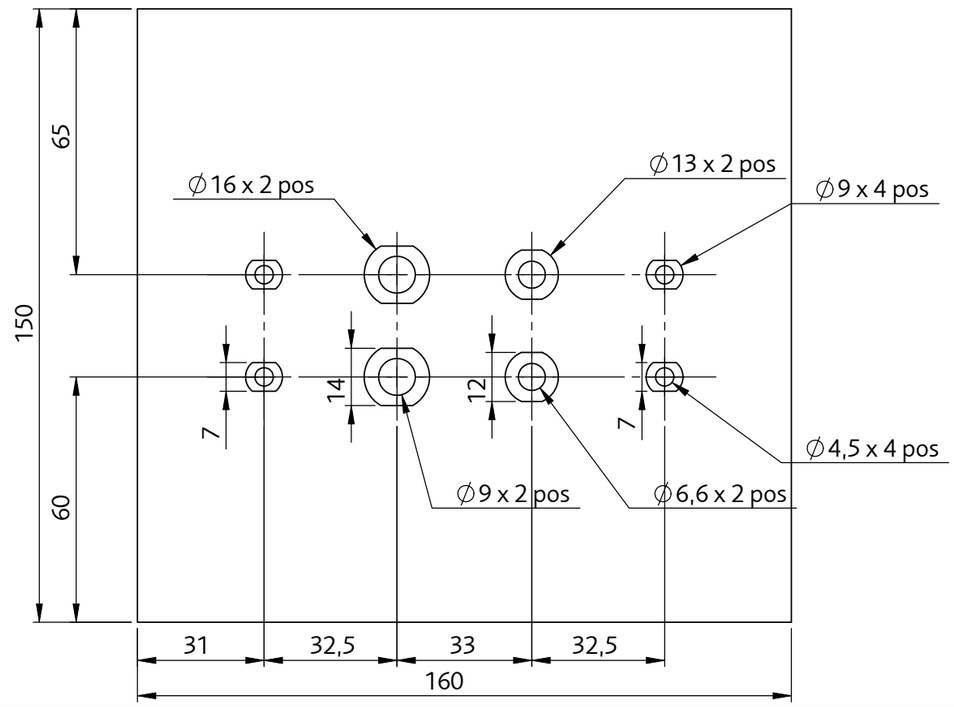

00	A	EDICION INICIAL	J. JOSE FLORES	JOSE .A. SANTOS	10/03/2009
Revisión/Revision	**Edición**/Edition	**Descripción**/Description	**Verifcado**/Verified	**Aprobado**/Approved	**Fecha**/Date

ELIMCO AERONAUTICS

Parque Tecnológico Aerópolis
C/ Hispano Aviación, parcela 36
Carretera Nacional IV, Km 529
41300 - La Rinconada - Sevilla
Tlf: 954 36 78 70
Fax: 954 35 22 54

Tolerancia de cotas generales segun DIN 7168 (grado de precisión mediano)
General tolerances according to DIN 7168 (medium tolerance class)

hasta 3 up to 3	**de 3 a 6** from 3 to 6	**de 6 a 30** from 6 to 30	**de 30 a 120** from 30 to 120	**de 120 a 400** from 120 to 400	**de 400 a 1000** from 400 to 1000	**desde 1000** from 1000
±0.1	±0.1	±0.2	±0.3	±0.5	±0.8	±1.2

La tolerancia angular ±1º
Angular tolerance ±1º

Dimensiones en milimetros
All dimensions in milimeters

Redondear todas las aristas vivas
Round all sharp cant

	Revisión/Revision	**Fecha**/Date
Dibujado Drawn	**M. A. González**	**10/03/2009**
Verificado Verified	**J. Jose Flores**	**10/03/2009**
Aprobado Approved	**J. A. Santos**	**10/03/2009**

ESCALA/SCALE: **1 : 1.5**
MATERIAL: **POLIETILENO**
PESO/WEIGHT: -
TRAT./TREATMENT: -

TITULO / TITLE:

BASE PORTATERMINALES

Nº DE PLANO / DWG. Nº.:
ELAD0822041401

REVISIÓN / REVISION : **00** | **EDICIÓN** / EDITION: **A** | **A3** | **HOJA** / SHEET: **1/1**

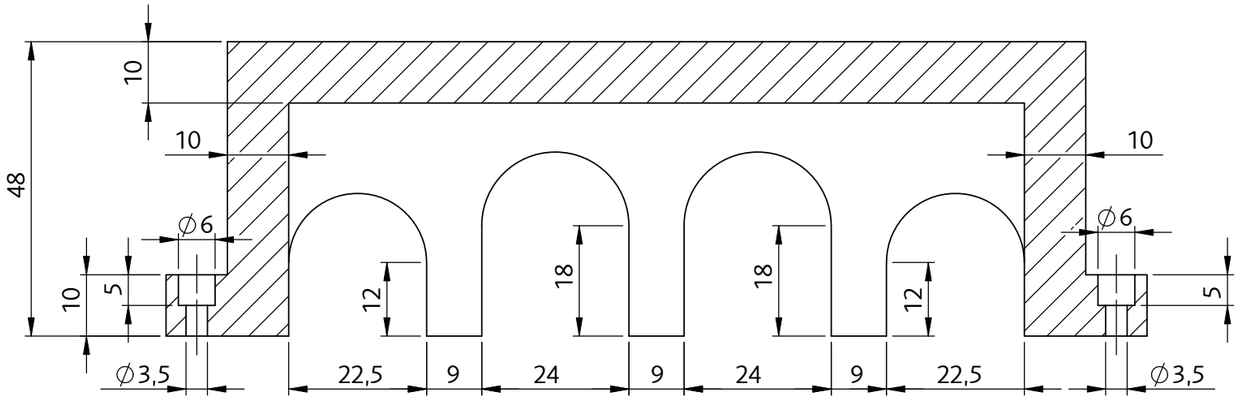

SECCIÓN A-A
ESCALA 1 : 1

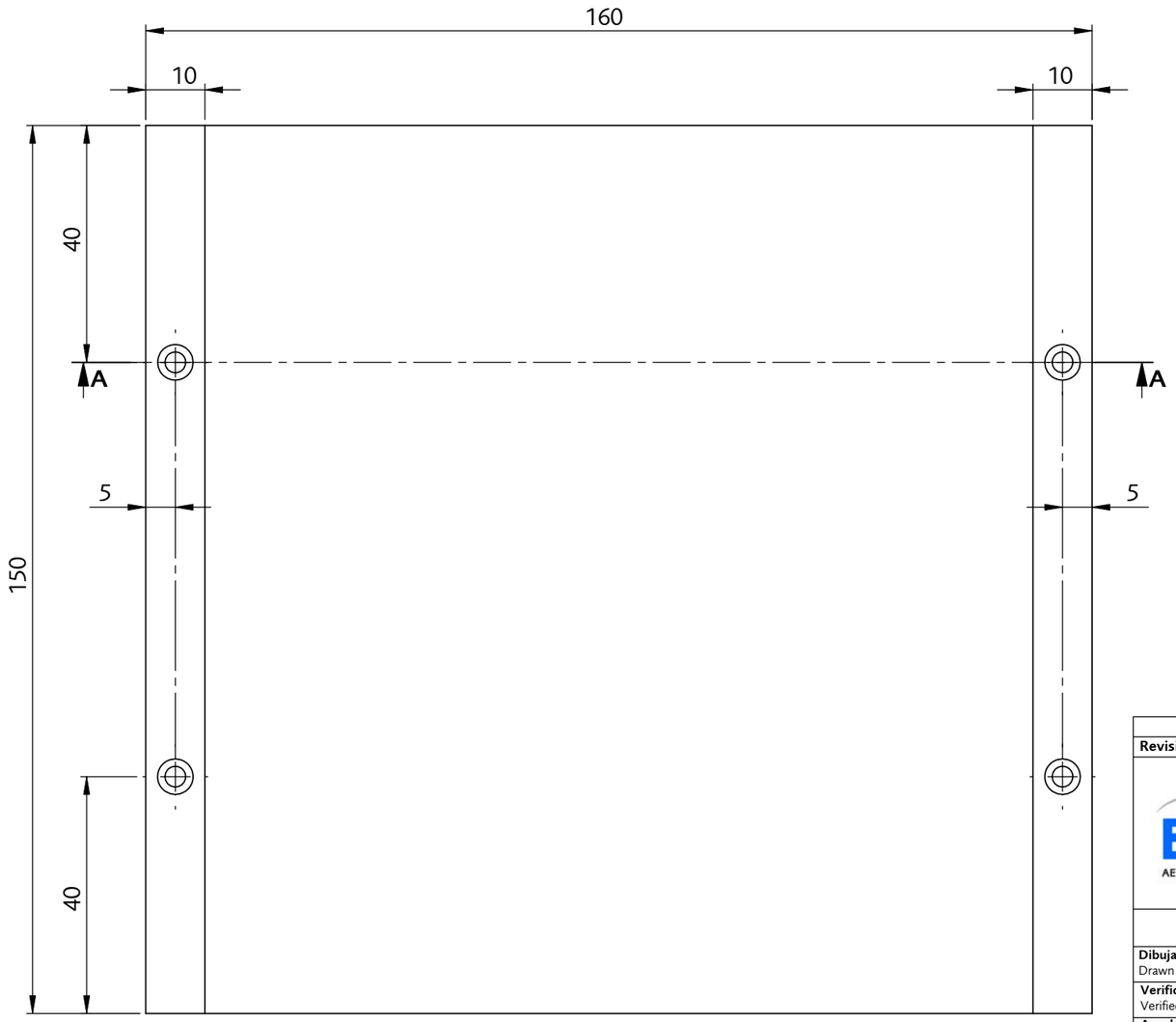

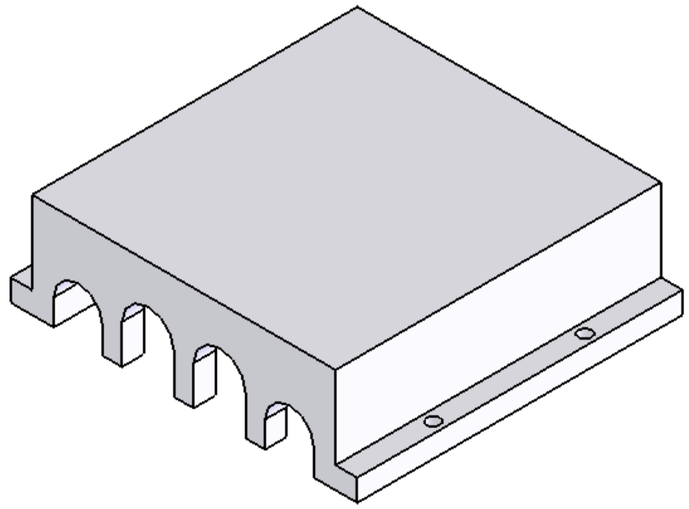

VISTA ISOMETRICA

00	A	EDICION INICIAL	J. JOSE FLORES	JOSE A. SANTOS	10/03/2009
Revisión/Revision	**Edición**/Edition	**Descripción**/Description	**Verifcado**/Verified	**Aprobado**/Approved	**Fecha**/Date

ELIMCO AERONAUTICS

Parque Tecnológico Aerópolis
C/ Hispano Aviación, parcela 36
Carretera Nacional IV, Km 529
41300 - La Rinconada - Sevilla
Tlf: 954 36 78 70
Fax: 954 35 22 54

Tolerancia de cotas generales segun DIN 7168 (grado de precisión mediano)
General tolerances according to DIN 7168 (medium tolerance class)

hasta 3 up to 3	**de 3 a 6** from 3 to 6	**de 6 a 30** from 6 to 30	**de 30 a 120** from 30 to 120	**de 120 a 400** from 120 to 400	**de 400 a 1000** from 400 to 1000	**desde 1000** from 1000
±0.1	±0.1	±0.2	±0.3	±0.5	±0.8	±1.2

La tolerancia angular ±1º Angular tolerance ±1º | **Dimensiones en milimetros** All dimensions in milimeters | **Redondear todas las aristas vivas** Round all sharp cant

	Revisión/Revision	**Fecha**/Date
Dibujado Drawn	**M. A. González**	**10/03/2009**
Verificado Verified	**J. Jose Flores**	**10/03/2009**
Aprobado Approved	**J. A. Santos**	**10/03/2009**

ESCALA/SCALE: **1 :1** | **MATERIAL:** **POLIETILENO**

PESO/WEIGHT: - | **TRAT.**/TREATMENT: -

TITULO / TITLE:

TAPA POTATERMINALES

Nº DE PLANO / DWG. Nº.:

ELAD0822041402

REVISIÓN / REVISION : **00** | **EDICIÓN** / EDITION: **A** | **A3** | **HOJA** / SHEET: **1/1**

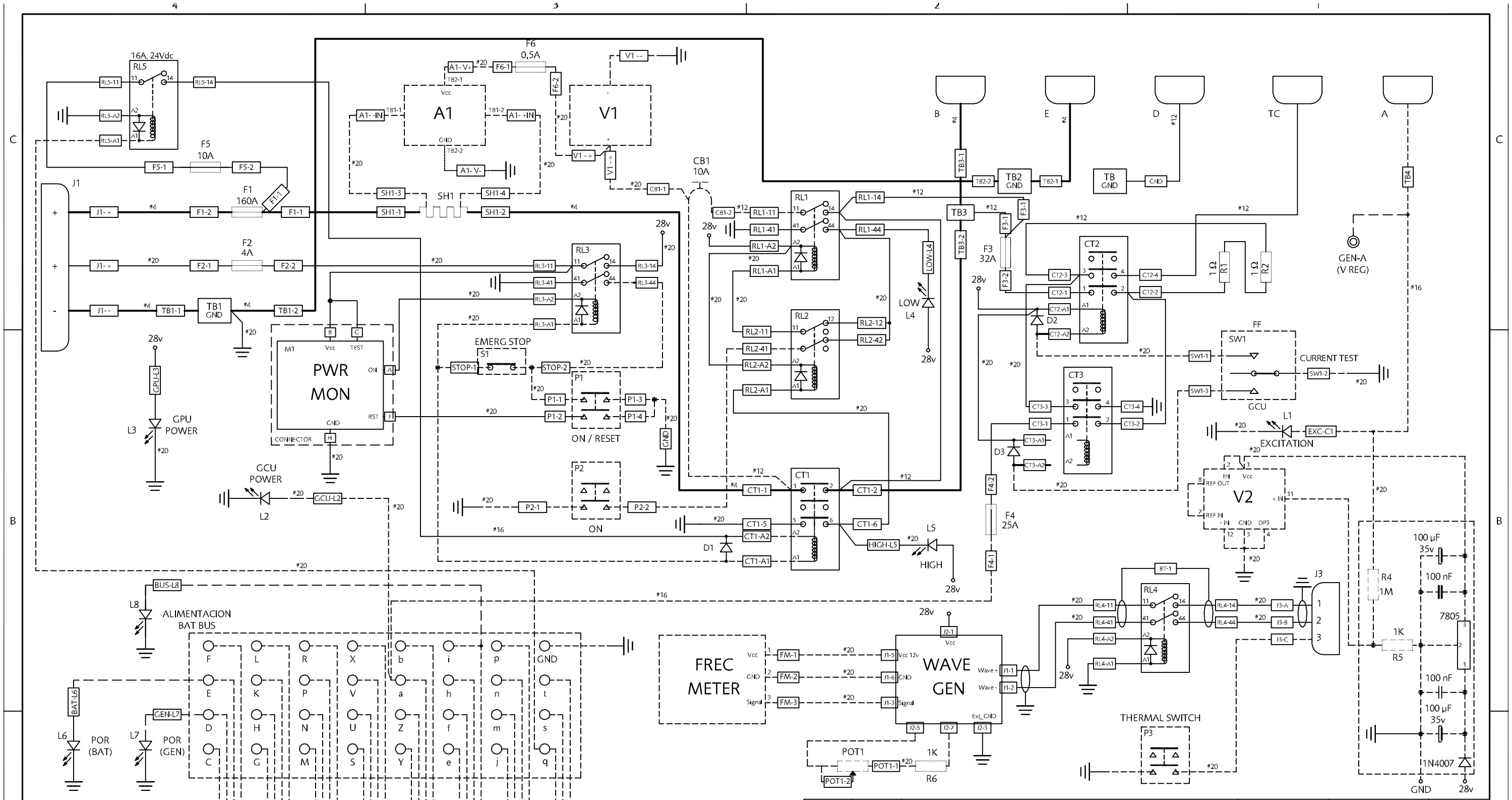

Revisión / Revision:	Edición / Edition:	Descripción /Description	Verificado /Verified	Aprobado /Approved	Fecha /Date
01	C	MODIFICAR R1, R2	J. J. FLORES	J. A. SANTOS	08/02/2010
01	B	MODIFICAR CT3	J. A. SANTOS	J. A. SANTOS	09/10/2009

ELIMCO

Parque Tecnológico Aerópolis
C/ Hispano Aviación, parcela 36
Carretera Nacional IV, Km 529
41300 - La Rinconada - Sevilla
Tlf: 954 36 78 70
Fax: 954 35 22 54

Tolerancias de cotas generales segun DIN 7168 (grado de precisión mediano)
General tolerances according to DIN 7168 (medium tolerance class)

hasta3	de 3 a 6	de 6 a 30	de 30 a 120	de 120 a 400	de 400 a 1000	desde 1000
up to 3	from 3 to 6	from 6 to 30	from 30 to 120	from 120 to 400	from 400 to 1000	from 1000
±0.1	±0.1	±0.2	±0.3	±0.5	±0.8	±1.2

La tolerancia angular ±1° Angular tolerance ±1° | **Dimensiones en milimetros** All dimensions in milimeters | **Redondear todas las aristas vivas** Round all sharp edges

	Nombre /Name	Fecha /Date
Dibujado Drawn	M. A. González	15-12-2008
Verificado Verified	J. J. Flores	15-12-2008
Aprobado Approved	J. A. Santos	15-12-2008

ESCALA / SCALE :

MATERIAL: -

PESO / WEIGHT: -

TRAT. /TREATMENT: -

TÍTULO / TITLE:

ESQUEMA ELECTRICO

N° DE PLANO / DWG. NO.:

ELAD0822042100

Revisión / Revision : 01 | Edición / Edition : B | A3 | HOJA /SHEET: 1/1

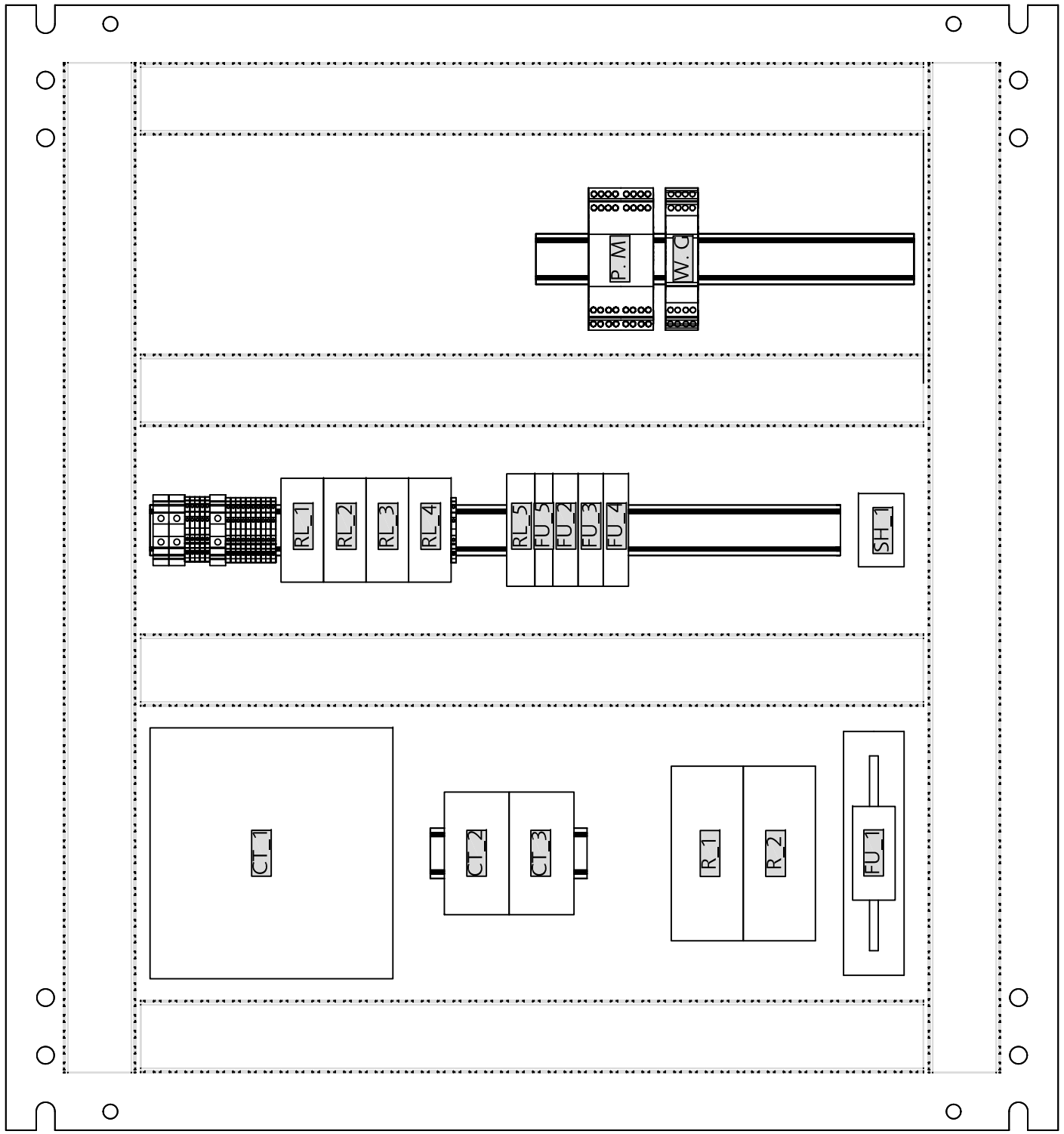

Revisión / Revision:	Edición / Edition:	Descripción /Description	Verificado /Verified	Aprobado /Approved	Fecha /Date
01	A	ELIMINAR R3 E INSERTAR RL_5 Y FU_5	J. A. SANTOS	J. A. SANTOS	06/07/2009
00	A	EDICION INICIAL	J. J. FLORES	J. A. SANTOS	20/02/2009

ELIMCO AERONAUTICS
Parque Tecnológico Aerópolis
C/ Hispano Aviación, parcela 36
Carretera Nacional IV, Km 529
41300 - La Rinconada - Sevilla
Tlf: 954 36 78 70
Fax: 954 35 22 54

Tolerancias de cotas generales segun DIN 7168 (grado de precisión mediano)
General tolerances according to DIN 7168 (medium tolerance class)

hasta3	de 3 a 6	de 6 a 30	de 30 a 120	de 120 a 400	de 400 a 1000	desde 1000
up to 3	from 3 to 6	from 6 to 30	from 30 to 120	from 120 to 400	from 400 to 1000	from 1000
±0.1	±0.1	±0.2	±0.3	±0.5	±0.8	±1.2

La tolerancia angular ±1°
Angular tolerance ±1°

Dimensiones en milimetros
All dimensions in milimeters

Redondear todas las aristas vivas
Round all sharp edges

	Nombre /Name	Fecha /Date
Dibujado Drawn	M. A. González	20/02/2009
Verificado Verified	J. A. Santos	20/02/2009
Aprobado Approved	J. A. Santos	20/02/2009

ESCALA / SCALE : -

MATERIAL: -

PESO / WEIGHT: -

TRAT. /TREATMENT: -

TÍTULO / TITLE:

ESQUEMA COMPONENTES

N° DE PLANO / DWG. NO.:

ELAD0822042101

Revisión / Revision : 01 | Edición / Edition : A | A3 | HOJA /SHEET: 1/1

2. TERMINALES TYCO PARA EL MAZO 1

THIS DRAWING IS UNPUBLISHED. RELEASED FOR PUBLICATION -,- .
© COPYRIGHT - BY TYCO ELECTRONICS CORPORATION. ALL RIGHTS RESERVED.

LOC	DIST
G	86

REVISIONS

P	LTR	DESCRIPTION	DATE	DWN	APVD
	P	REDRAWN PER OG3A-0395-04	02JUN04	JR	MS

1 TONGUE MATERIAL THICKNESS .048±.003

2 BODY: COPPER PER ASTM B-152
TIN PER ASTM B-545
INSULATION: PVC, COLOR - YELLOW
METALLIC SLEEVE: COPPER PER ASTM B-152
METALLIC BAND: STEEL PER ASTM A109

3 FOR .436 MAX WIRE INSULATION DIA

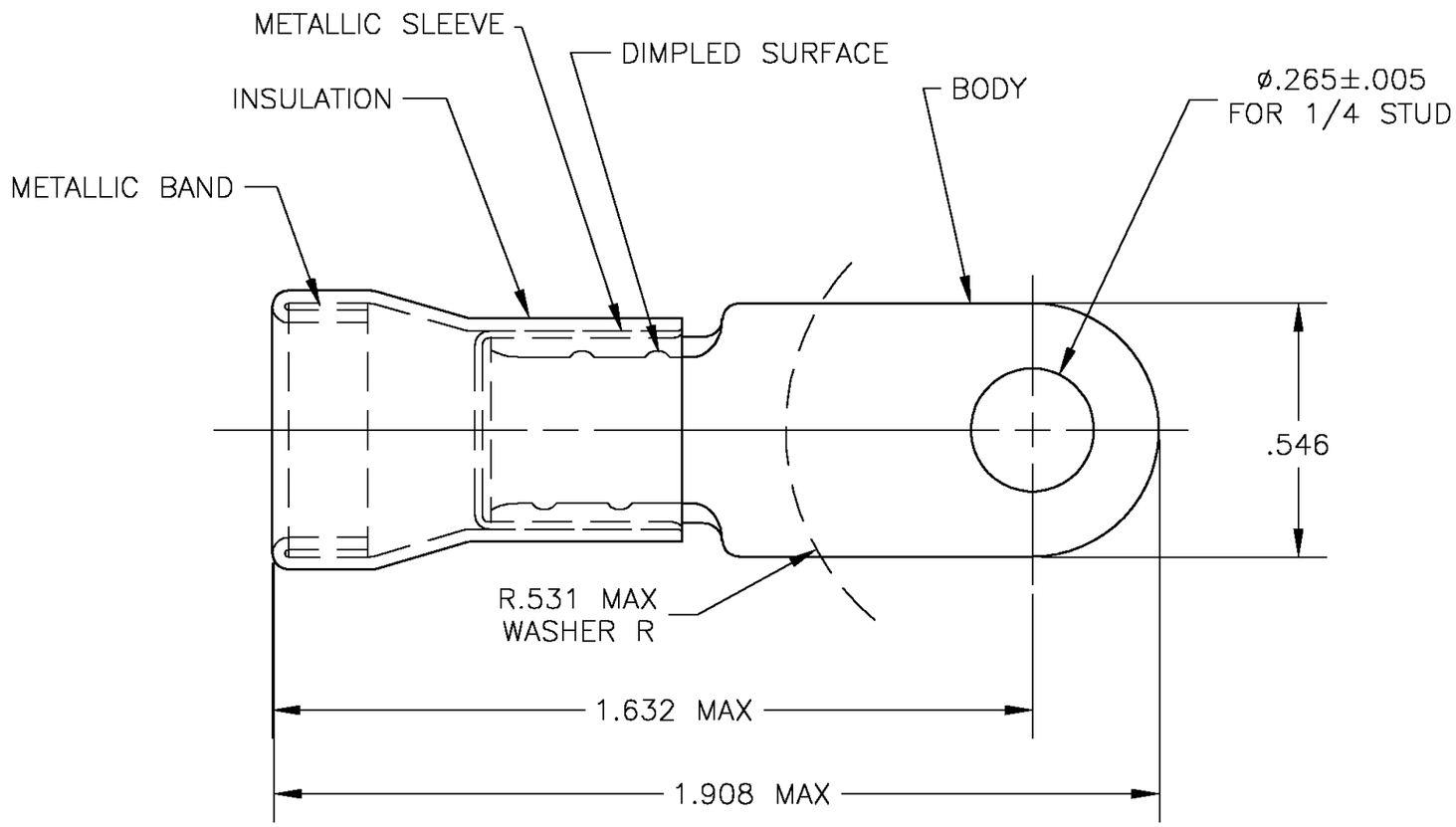

QTY	DESCRIPTION	PART NO
1	WIRE TERMINAL	322053

THIS DRAWING IS A CONTROLLED DOCUMENT.

DIMENSIONS: INCHES

TOLERANCES UNLESS OTHERWISE SPECIFIED:

0 PLC	± -
1 PLC	± -
2 PLC	± -
3 PLC	± .008
4 PLC	± -
ANGLES	± 5'

MATERIAL - 2

FINISH - 2

DWN	jr ruth	02JUN04
CHK	MJ SPICER	02JUN04
APVD	MJ SPICER	02JUN04
PRODUCT SPEC	—	
APPLICATION SPEC	—	
WEIGHT	—	

CUSTOMER DRAWING

Tyco Electronics Corporation
Harrisburg, PA 17105

NAME
TERMINAL, AMPLI-BOND, RING TONGUE
WIRE SIZE: 4
—

SIZE	CAGE CODE	DRAWING NO	RESTRICTED TO
A3	00779	C-322053	—

SCALE 3:1 SHEET 1 OF 1 REV P

AMP 1470-19 REV 31MAR2000

DRAWING MADE IN THIRD ANGLE PROJECTION

THIS DRAWING IS UNPUBLISHED. RELEASED FOR PUBLICATION ,19 .

© COPYRIGHT 19 BY AMP INCORPORATED. ALL INTERNATIONAL RIGHTS RESERVED.

LOC	DIST	P	F
G	14		

REVISIONS

ZONE	LTR	DESCRIPTION	DATE	APPD
	F	EC 0720-0279-93	6-18-93	SSG BB

AMP
WIRE RANGE

4 AWG
STRANDED

METRIC

DIMENSIONS LISTED IN mm [INCHES]

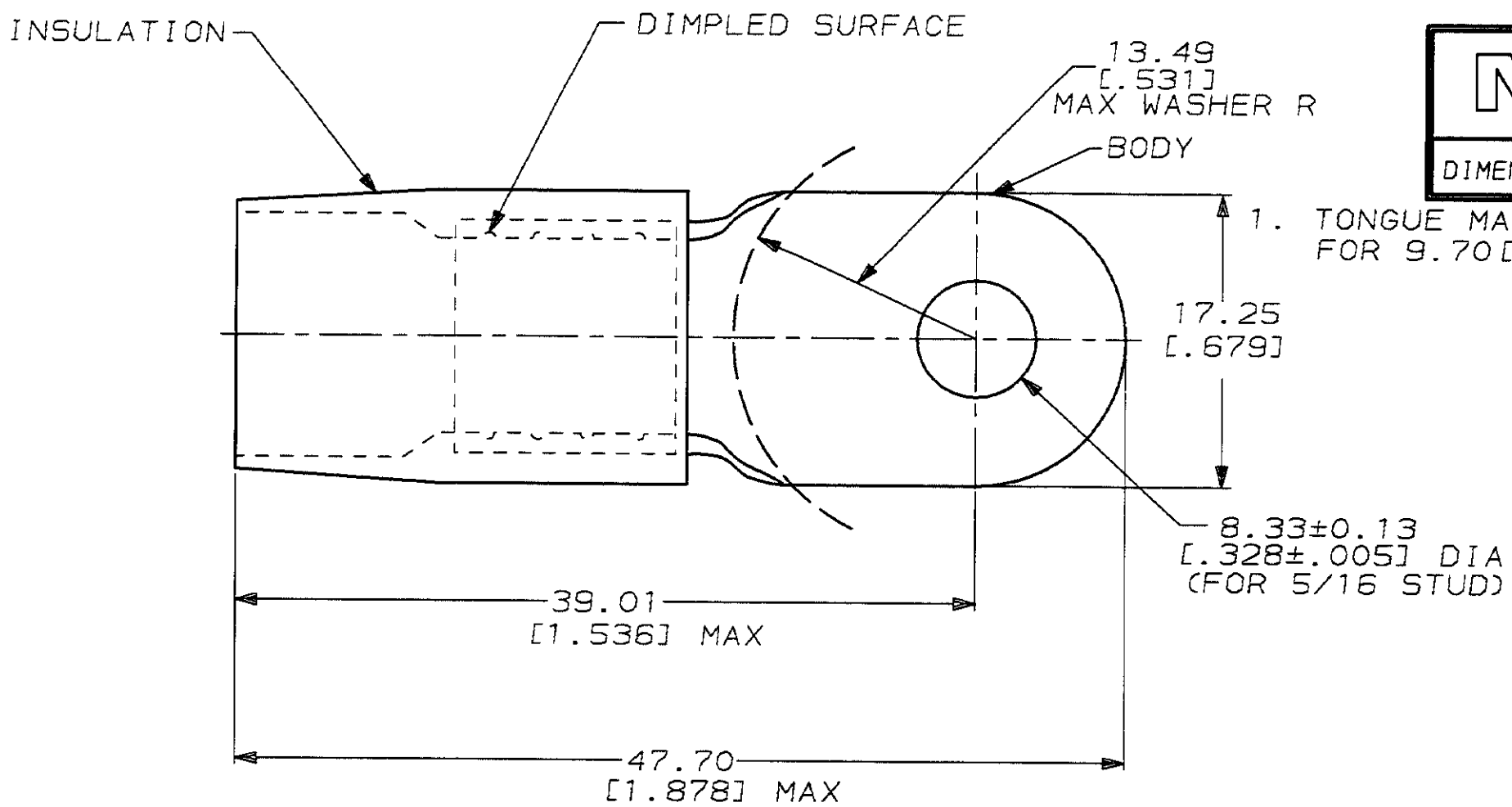

1. TONGUE MATERIAL THK 1.22±0.08[.048±.003]
FOR 9.70[.382] MAX WIRE INS DIA

AMP INCORPORATED
CUSTOMER SERVICE SYSTEMS

FOR ADDITIONAL PRODUCT INFORMATION OR COPIES OF DRAWINGS AND TECHNICAL DOCUMENTS	PRODUCT INFORMATION CENTER 1-800-522-6752
FOR APPLICATION TOOLING INFORMATION	TOOLING ASSISTANCE CENTER 1-800-722-1111
FOR ORDER ENTRY	1-800-526-5142

THIS DRAWING IS A CONTROLLED DOCUMENT FOR AMP INCORPORATED. IT IS SUBJECT TO CHANGE AND THE CONTROLLING ENGINEERING ORGANIZATION SHOULD BE CONTACTED FOR THE LATEST REVISION.

MAX RECOMMENDED OPERATING TEMPERATURE: 105°c

VOLTAGE RATING: - -

CIRCULAR MIL AREA: 16.8-26.7mm² [33,100-52,600] STRANDED

MILITARY P/N AND CLASS	QTY	PACKAGE TYPE	PART NO
MS25036-124 CLASS 2	-	LOOSE PC	324051

DO NOT SCALE PRINT.
UNLESS SPECIFIED
~~DIMENSIONS IN mm [INCHES]~~
TOLERANCES ON:
2 PLC DEC ± 0.20[.008]
3 PLC DEC ± -
ANGLES ± -

MATERIAL
COPPER PER ASTM B-152
NYLON (MIL-M-20693) TYPE 1
COLOR: YELLOW

FINISH
TIN PLATE PER MIL-T-10727

DR	6-18-93	S.S. GOULDEN
CHK	6-18-93	R. HERSEY
APPD	6-18-93	B. BARE
APPD	6-18-93	M. ELLIS

PRODUCT SPEC -

APPLICATION SPEC -

WEIGHT -

AMP Incorporated
Harrisburg, PA 17105-3608

NAME
TERMINAL, RING TONGUE, TERMINYL
WIRE SIZE: 4 AWG

SIZE	CAGE CODE	DRAWING NO
B	00779	C-324051
SCALE NTS		SHEET 1 OF 1

AMP 1470-15 REV 3-92

18 JUN 1993 14:51:14 AMPT1122 <UU128A>DEPT1132>AMPT1122>U.CUSTERMINYL

CUSTOMER DRAWING

DRAWING MADE IN THIRD ANGLE PROJECTION

THIS DRAWING IS UNPUBLISHED. RELEASED FOR PUBLICATION ,19 .

© COPYRIGHT 19 BY AMP INCORPORATED. ALL INTERNATIONAL RIGHTS RESERVED.

LOC	DIST
G	14

REVISIONS				
ZONE	LTR	DESCRIPTION	DATE	APPD
	G	EC 0720-0279-93	6-21-93	BB

AMP
WIRE RANGE
4 AWG
STRANDED

METRIC
DIMENSIONS LISTED IN mm [INCHES]

1. TONGUE MATERIAL THK 1.22±0.08[.048±.003] FOR 9.70[.382] MAX WIRE INS DIA

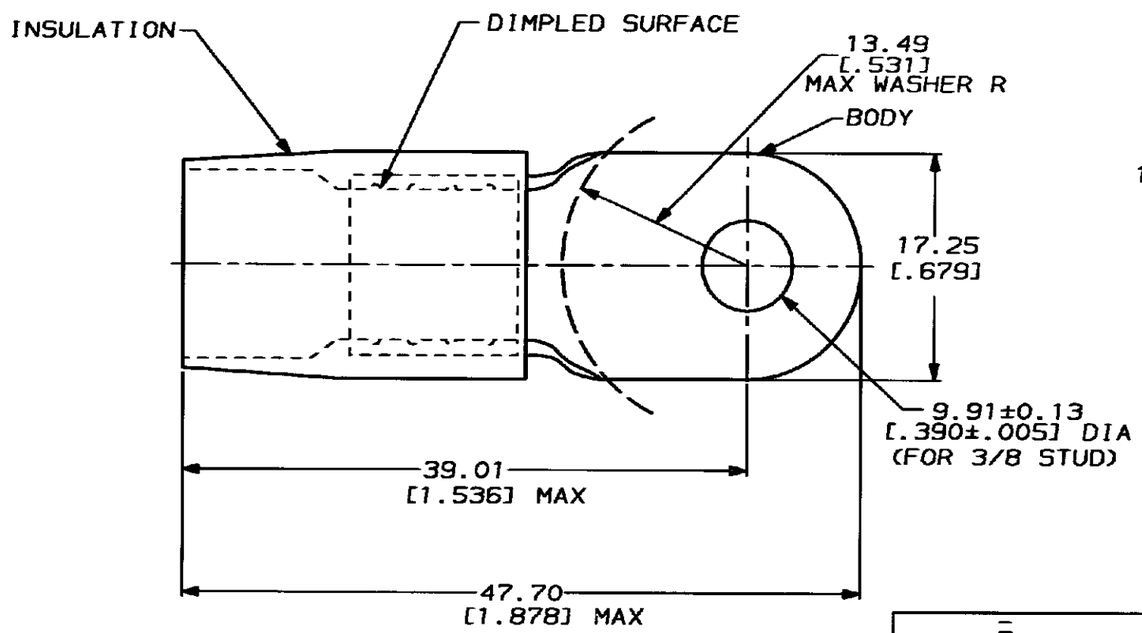

MILITARY P/N AND CLASS	QTY	PACKAGE TYPE	PART NO
=	10	LOOSE PC, BOX	B-324052-5
MS25036-125 CLASS 2	-	LOOSE PC	324052

AMP INCORPORATED
CUSTOMER SERVICE SYSTEMS

FOR ADDITIONAL PRODUCT INFORMATION OR COPIES OF DRAWINGS AND TECHNICAL DOCUMENTS	PRODUCT INFORMATION CENTER 1-800-522-6752
FOR APPLICATION TOOLING INFORMATION	TOOLING ASSISTANCE CENTER 1-800-722-1111
FOR ORDER ENTRY	1-800-526-5142

MAX RECOMMENDED OPERATING TEMPERATURE: 105°c

VOLTAGE RATING: - -

CIRCULAR MIL AREA: 16.8-26.7mm² [33,100-52,600] STRANDED

THIS DRAWING IS A CONTROLLED DOCUMENT FOR AMP INCORPORATED. IT IS SUBJECT TO CHANGE AND THE CONTROLLING ENGINEERING ORGANIZATION SHOULD BE CONTACTED FOR THE LATEST REVISION.

DO NOT SCALE PRINT. UNLESS SPECIFIED ~~DIMENSIONS IN mm [INCHES]~~ TOLERANCES ON: 2 PLC DEC ± 0.20[.008] 3 PLC DEC ± - ANGLES ± -

MATERIAL: COPPER PER ASTM B-152 NYLON (MIL-M-20693) TYPE 1 COLOR: YELLOW

FINISH: TIN PLATE PER MIL-T-10727

DR	6-18-93	S.S. GOULDEN
CHK	6-18-93	R. HERSEY
APPD	6-18-93	B. BARE
APPD	6-18-93	H. ELLIS

PRODUCT SPEC: -

APPLICATION SPEC: -

WEIGHT: -

AMP Incorporated
Harrisburg, PA 17105-3608

NAME: TERMINAL, RING TONGUE, TERMINYL WIRE SIZE: 4 AWG

SIZE	CAGE CODE	DRAWING NO
B	00779	C-324052
SCALE NTS		SHEET 1 OF 1

CUSTOMER DRAWING

AMP 1470-15 REV 3-92

21 JUN 1993 08:39:45 AMPT1122 <UU128A>DEPT1132>AMPT1122>U.CUSTERMINYL

DRAWING MADE IN THIRD ANGLE PROJECTION

LOC G DIST 14

THIS DRAWING IS UNPUBLISHED. RELEASED FOR PUBLICATION , 19

© COPYRIGHT 19 BY AMP INCORPORATED, HARRISBURG, PA. ALL INTERNATIONAL RIGHTS RESERVED. AMP PRODUCTS MAY BE COVERED BY U.S. AND FOREIGN PATENTS AND/OR PATENTS PENDING.

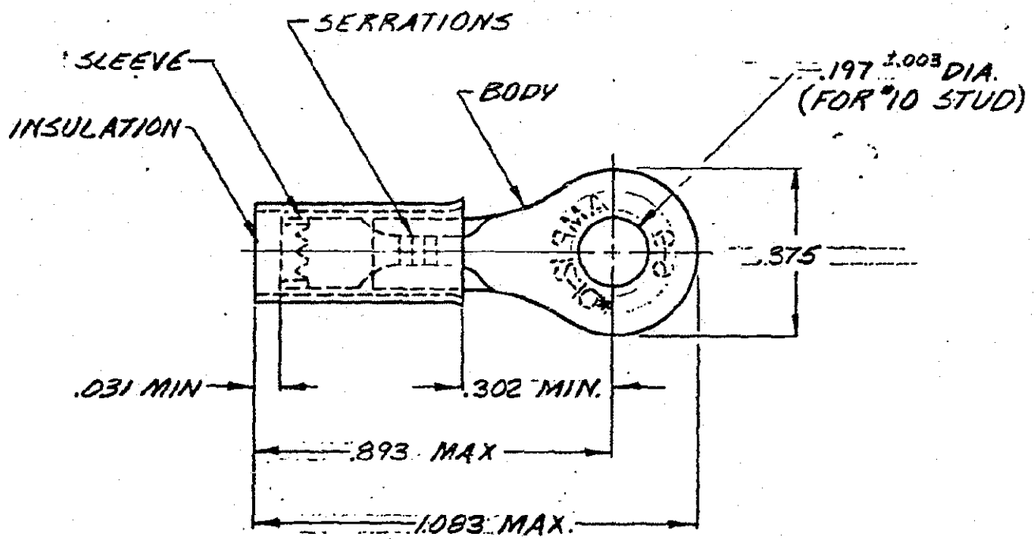

WIRE INSULATION DIA .150-.250
TONGUE MATERIAL THK .039 ±.002

TIN PLATE (ASTM B545)

⚠1 SUPERSEEDED BY 8-35109-5

REVISIONS

P	F	ZONE	LTR	DESCRIPTION		DATE	APPROVED
✓	✓		E	REV & RED'WN P84-0078	PMF	6-19-84	PJM
✓	✓		F	REVISED PER G-1476	RFB	9-29-85	DM
✓	✓		G	OBS 2--2 & 2--3 PER G-2340		4/14/87	SB PJM
✓	✓		H	REV PER G-4732	JT	7/26/88	PJM
✓	✓		J	OBS 2--4 PER G-3702	JT	10/14/88	AG
			K	REV/G-019392	LO	9/92	M.E.
			L	REV/0720-0036-93	TQ	3-4-93	M.E.
✓			M	OBS 8--5 PER 0720-0324-93	LO	2-3-94	ML
			N	REV/0720-0410-94	LO	9-14-94	ML
			P	REV/0720-0605-95	MB	5-3-95	NB
			R	REV/0L20-0197-97	ME	8-20-97	SB
			S	REV PER OG3A-0274-01		27/JUL/01	JR/TM

	INS. COLOR	QTY.	DESCRIPTION	PART NO
⚠1	YELLOW	25	LOOSE PC, BLS	9- -4
⚠1	YELLOW	5	LOOSE PC, BLS	8- -4
	YELLOW	25	LOOSE PC, BAG	8- -5
	YELLOW	100	LOOSE PC, BOX	8 -1
OBSOLETE	~~YELLOW~~	~~500~~	~~ON TAPE, LARGE BOX~~	~~2- -4~~
OBSOLETE	~~BLUE~~		~~LOOSE PIECE~~	~~2- -3~~
OBSOLETE	~~RED~~		~~LOOSE PIECE~~	~~2- -2~~
	YELLOW	2500	ON TAPE, REEL	2- -1
	YELLOW	—	LOOSE PIECE	35109

UNLESS OTHERWISE SPECIFIED DIMENSIONS ARE IN INCHES. TOLERANCES ON: DECIMALS ±.008 ANGLES ±—

MATERIAL: INSULATION: NYLON, COLOR: SEE TABLE
BODY & SLEEVE COPPER (ASTM B152)

FINISH: BODY: SEE NOTE

CONTRACT NO
DR P. Fortney 6-19-84
CHK P. Mutzabaugh 4/12/85
APPD Stephen P. Magee 4-15-85
APPD
DSGN APPD
OTHER APPD

AMP | AMP INCORPORATED Harrisburg, Pa.

NAME: WIRE TERMINAL, PIDG, RING TONGUE, WIRE SIZE 12-10

SIZE B | FSCM NO 00779 | DRAWING NO 35109

SCALE NTS | SHEET —

AMP 1470-17

CUSTOMER DRAWING

THIS DRAWING IS UNPUBLISHED. RELEASED FOR PUBLICATION -,- .
© COPYRIGHT - BY TYCO ELECTRONICS CORPORATION. ALL INTERNATIONAL RIGHTS RESERVED.

LOC	DIST
G	02

REVISIONS

P	LTR	DESCRIPTION	DATE	DWN	APVD
	T1	REVISED PER ECR-08-021718	08SEP08	HMR	TM

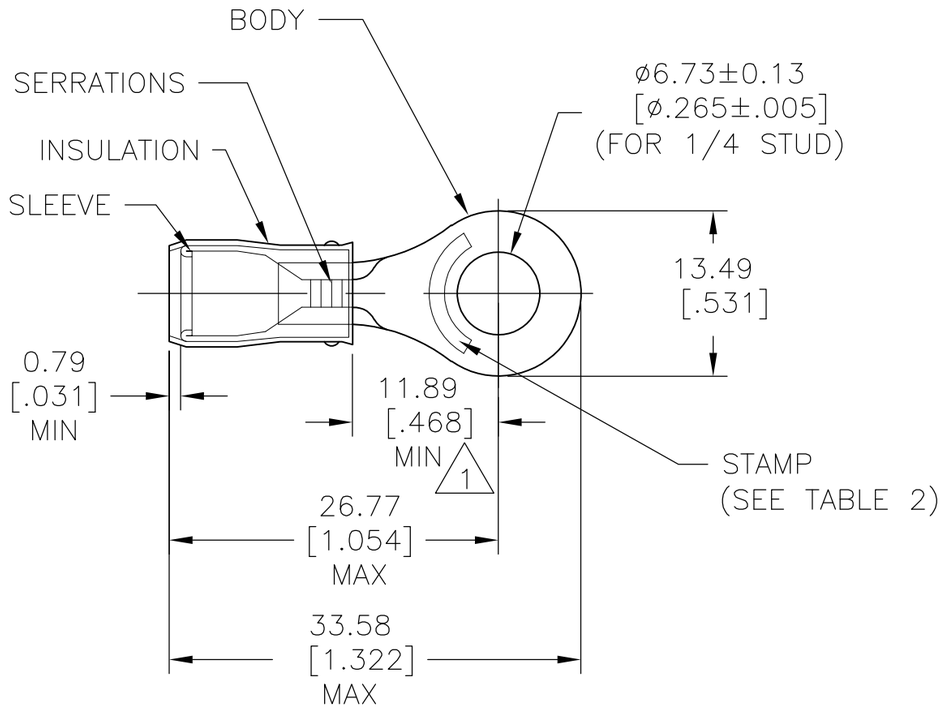

STYLE "A" – STANDARD

1. DIMENSION APPLIES FROM EDGE OF METAL WIRE BARREL TO CENTER OF STUD.
2. TONGUE MATERIAL THK 1.02±.05 [.040±.002]
3. 105°C MAX OPERATING TEMPERATURE
4. 300 VOLT MAX.
5. CIRCULAR MIN AREA: 2.62–6.64 mm^2 [5180–13100] SOLID OR STRANDED
6. UL LISTED E13288 12–10 AWG SOLID OR STRANDED
7. CSA CERTIFIED LR7189 12–10 AWG SOLID OR STRANDED
8. MILITARY MS25036–157 CLASS 1
9. MILITARY MS25036–157 CLASS 2

TABLE 1

QTY	MATERIAL & FINISH	PACKAGING	PART NO.
50	BODY & SLEEVE: COPPER PER ASTM B–152 TIN PLATE PER ASTM B–545	LOOSE PC, BOX	8–320569–2
500	INSULATION: NYLON PER ASTM D–4066, TYPE 1, COLOR: YELLOW	LOOSE PIECE	320569

TABLE 2

PART NO.	COLOR STRIPE	WIRE SIZE	FOR WIRE INSULATION OD	STAMP	STYLE	PART NO. ON TAPE
8–320569–2	NONE	12–10	3.81–5.84 [.150–.230]	AMP 12–10*	"A"	–
8 320569 9	NONE	12–10	3.81–5.84 [.150–.230]	AMP 12–10*	"A"	2–320569–3 9

THIS DRAWING IS A CONTROLLED DOCUMENT.

DIMENSIONS: mm [INCHES]

TOLERANCES UNLESS OTHERWISE SPECIFIED:
0 PLC ± –
1 PLC ± 0.2 [.008]
2 PLC ± –
3 PLC ± –
4 PLC ± –
ANGLES ± 0°30'

MATERIAL: SEE TABLE 1
FINISH: –

DWN	RAGHAVENDRA	08SEP2008
CHK	T MICHIELUTTI	08SEP2008
APVD	T MICHIELUTTI	08SEP2008
PRODUCT SPEC	—	
APPLICATION SPEC	—	
WEIGHT	—	

Tyco Electronics
Tyco Electronics Corporation
Harrisburg, PA 17105–3608

NAME: TERMINAL RING TONGUE, NYLON, PIDG, WIRE SIZE: 12–10

SIZE	CAGE CODE	DRAWING NO	RESTRICTED TO
A3	00779	C-320569	—

CUSTOMER DRAWING | SCALE 2:1 | SHEET 1 OF 2 | REV T1

1470–19 (1/08)

THIS DRAWING IS UNPUBLISHED. RELEASED FOR PUBLICATION –,– .
© COPYRIGHT – BY TYCO ELECTRONICS CORPORATION. ALL INTERNATIONAL RIGHTS RESERVED.

LOC	DIST
G	02

REVISIONS

P	LTR	DESCRIPTION	DATE	DWN	APVD
	–	SEE SHEET 1	–	–	–

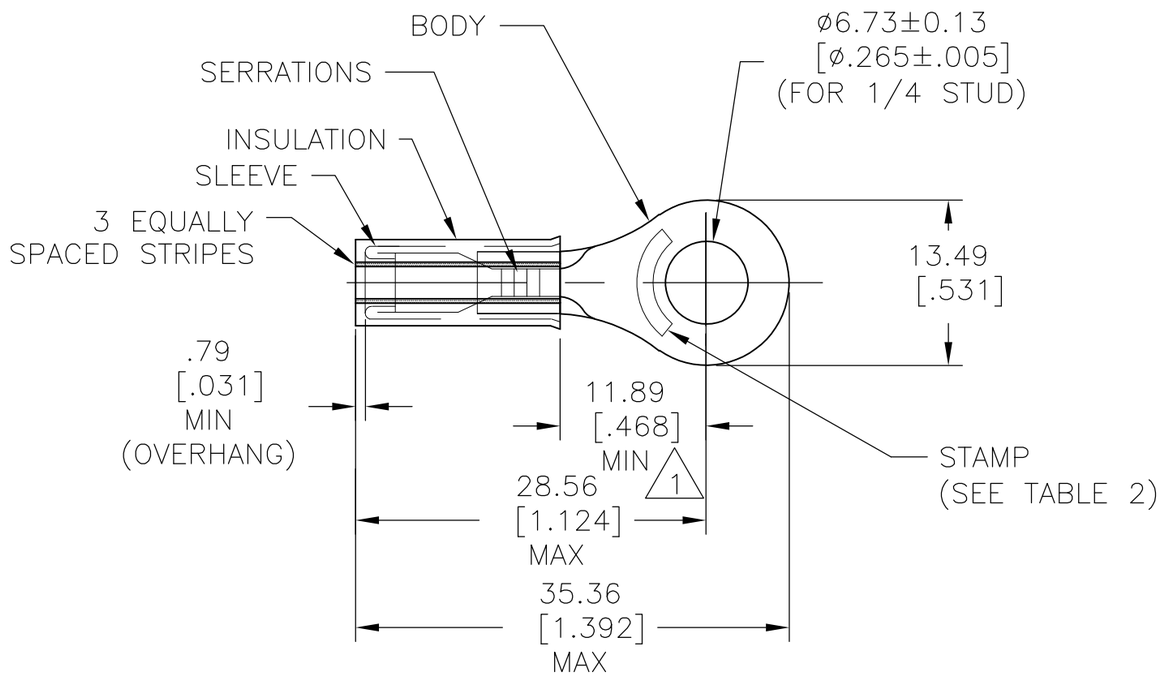

STYLE "B" – INSULATION RESTRICTING

1. DIMENSION APPLIES FROM EDGE OF METAL WIRE BARREL TO CENTER OF STUD.
2. TONGUE MATERIAL THK 1.02±.05 [.040±.002]
3. 105°C MAX OPERATING TEMPERATURE
4. 300 VOLT MAX.
5. CIRCULAR MIN AREA: 2.62–6.64 mm² [5180–13100] SOLID OR STRANDED
6. MILITARY M7928/1–59 CLASS 1
7. MILITARY M7928/1–66 CLASS 1
8. MILITARY M7928/1–59 CLASS 2
9. MILITARY M7928/1–66 CLASS 2

TABLE 1

QTY	MATERIAL & FINISH	PACKAGING	PART NO.
500	BODY: COPPER PER ASTM B–152 TIN PLATE PER ASTM B–545 SLEEVE: COPPER PER ASTM B–152 NICKEL PLATE PER QQ–N–290 INSULATION: NYLON PER ASTM D–4066, TYPE 1 COLOR: YELLOW	LOOSE PIECE	2–320569–6 2–320569–5

TABLE 2

PART NO.	COLOR STRIPE	WIRE SIZE	FOR WIRE INSULATION OD	STAMP	STYLE	PART NO. ON TAPE
2–320569–6 7 9	BROWN	10	3.02–5.08 [.119–.200]	AMP 10*	"B"	2–320569–8 9
2–320569–5 6 8	YELLOW	12	2.41–5.08 [.095–.200]	AMP 12*		~~2–320569–7~~ OBSOLETE

THIS DRAWING IS A CONTROLLED DOCUMENT.

DIMENSIONS: mm [INCHES]

TOLERANCES UNLESS OTHERWISE SPECIFIED:
0 PLC ± –
1 PLC ± 0.2 [.008]
2 PLC ± –
3 PLC ± –
4 PLC ± –
ANGLES ± 0°30'

MATERIAL: SEE TABLE 1
FINISH: –

DWN	RAGHAVENDRA	08SEP2008
CHK	T MICHIELUTTI	08SEP2008
APVD	T MICHIELUTTI	08SEP2008
PRODUCT SPEC	—	
APPLICATION SPEC	—	
WEIGHT	—	

Tyco Electronics
Tyco Electronics Corporation
Harrisburg, PA 17105–3608

NAME: TERMINAL RING TONGUE, NYLON, PIDG, WIRE SIZE: 12–10

SIZE	CAGE CODE	DRAWING NO	RESTRICTED TO
A3	00779	C–320569	—

CUSTOMER DRAWING | SCALE 2:1 | SHEET 2 OF 2 | REV T1

1470–19 (1/08)

ALL RIGHTS RESERVED. NO PORTION OF THIS PUBLICATION, WHETHER IN WHOLE OR IN PART CAN BE REPRODUCED WITHOUT THE EXPRESS WRITTEN CONSENT OF SPC TECHNOLOGY.

REVISIONS			DOC. NO. SPC-F005 * Effective: 12/21/98 * DCP No: 880					
DCP #	REV	DESCRIPTION	DRAWN	DATE	CHECKD	DATE	APPRVD	DATE
	B	Revised and Redrawn		1/11/93				
1210	C	Renamed-was 861-*	JWM	7/28/01	JC	8/9/01	JC	8/9/01

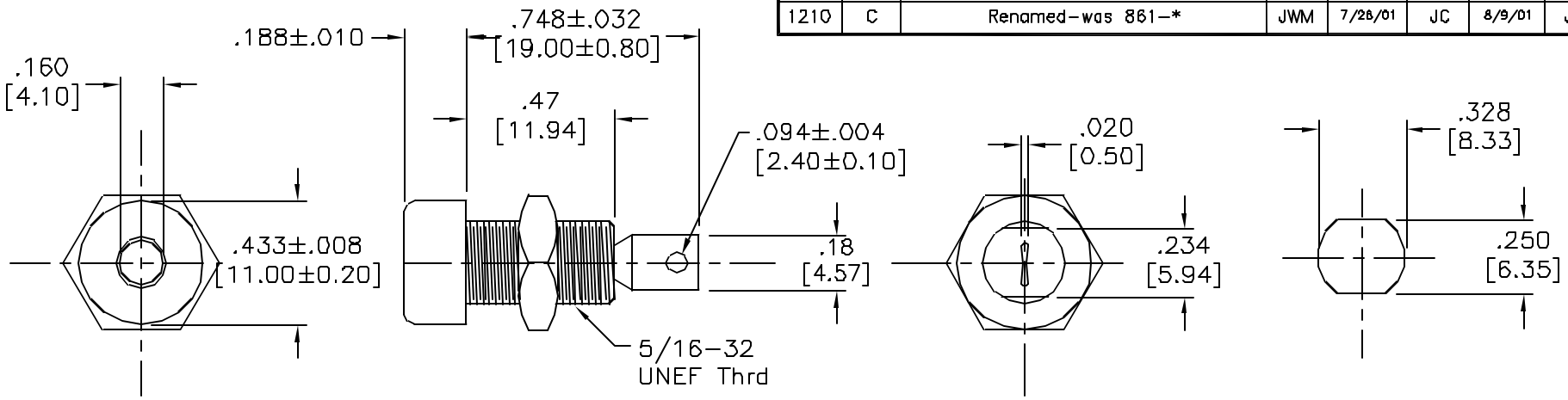

MOUNTING HOLE LAYOUT

PART NUMBER	COLOR
861-B	BLACK
861-BL	BLUE
861-GR	GREEN
861-OR	ORANGE
861-R	RED
861-V	VIOLET
861-W	WHITE
861-Y	YELLOW

1. MATERIAL:
   CONTACT: PHOSPHOR BRONZE
   PER QQ-B-750
   BODY: NYLON 66 PER ASTM D4066
2. CONTACT FINISH: BRIGHT TIN
3. HARDWARE: NICKEL PLATED NUT
4. PANEL THICKNESS: UP TO .343" [8.8mm]
5. BODY THREAD STRIPPING TORQUE:
   6.0 LB. IN. [7 KG. CM.]
6. FLAMMABILITY: UL94V-2
   SELF-EXTINGUISHING
7. CONTINUOUS USE TEMPERATURE:
   -40°F (-40°C) TO 185°F (85°C)
8. CURRENT RATING: 15 AMPS
9. BREAKDOWN VOLTAGE: 7000 VRMS MINIMUM
10. CONTACT RESISTANCE: .010 OHMS MAX.
11. CONTACT-TO-PANEL CAP.: 2.4 pF NOMINAL
12. FOR STANDARD .175" TIP PLUGS.
13. KEYED MOUNTING WITH DOUBLE FLATS
14. ACCEPTS UP TO 16 GAUGE WIRE
15. WEIGHT: .0058 lbs

DISCLAIMER:
ALL STATEMENTS AND TECHNICAL INFORMATION CONTAINED HEREIN ARE BASED UPON INFORMATION AND/OR TESTS WE BELIEVE TO BE ACCURATE AND RELIABLE. SINCE CONDITIONS OF USE ARE BEYOND OUR CONTROL, THE USER SHALL DETERMINE THE SUITABILITY OF THE PRODUCT FOR THE INTENDED USE AND ASSUME ALL RISK AND LIABILITY WHATSOEVER IN CONNECTION THEREWITH.

Tolerances Unless Otherwise Specified:
.X=±.015
.XX=±.010
.XXX=±.005

DRAWN BY:	DATE:
JP	1/11/93
CHECKED BY:	DATE:
JOHN COLE	1/14/93
APPROVED BY:	DATE:
J.Liska	1/19/93

SPC TECHNOLOGY

DRAWING TITLE: Tip Jacks (Standard)

SIZE	DWG. NO.	ELECTRONIC FILE	REV
A	TA-376	TA-376.dwg	C

SCALE: NTS | U.O.M.: INCHES [mm] | SHEET: 1 OF 1

SPC-F005.DWG