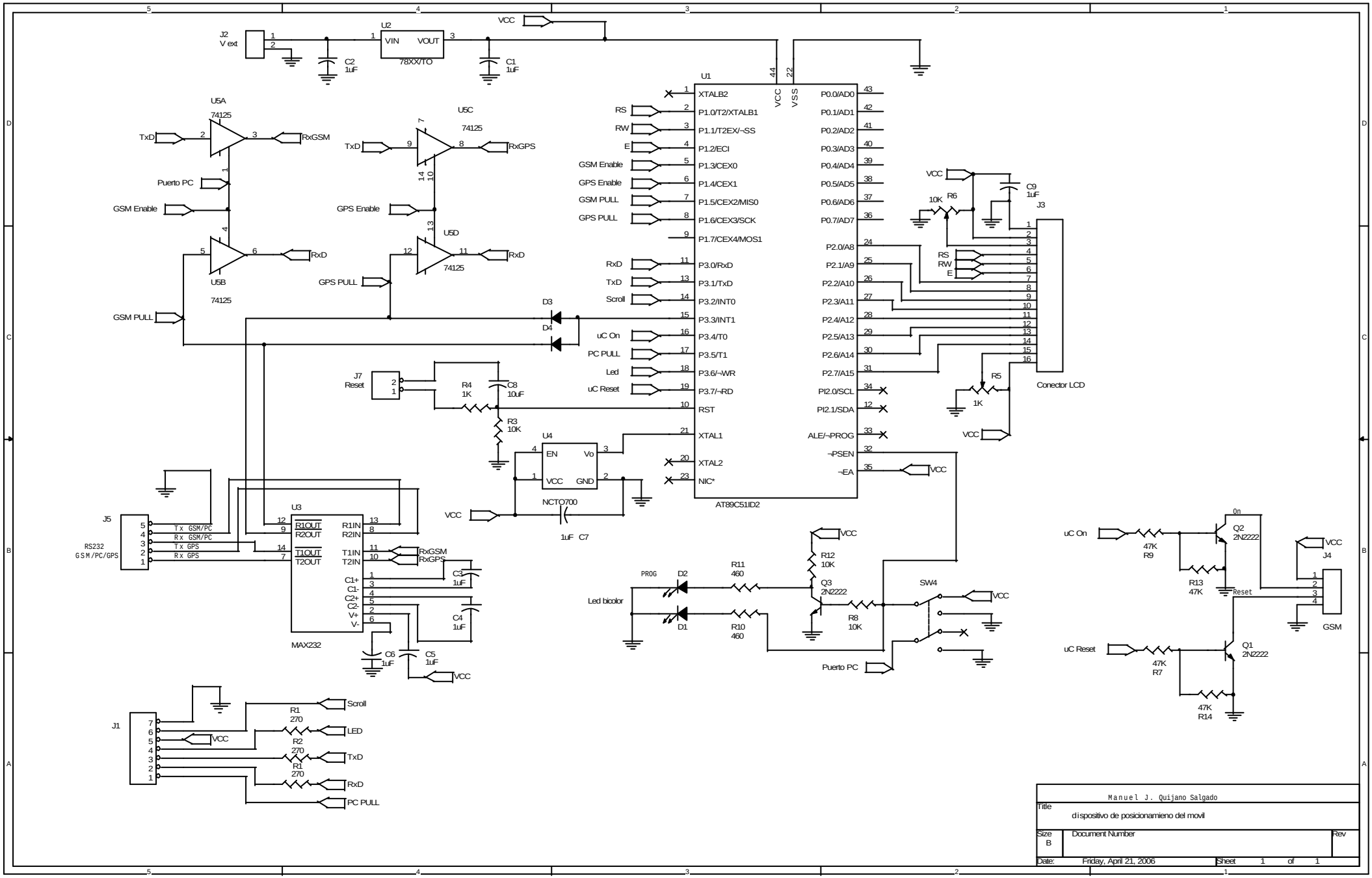

Manuel J. Quijano Salgado

Title: dispositivo de posicionamieno del movil

Size: B | Document Number | Rev

Date: Friday, April 21, 2006 | Sheet 1 of 1